DIAMOND®

Aiding motion in every industry

CHAINS FOR CEMENT INDUSTRY

ENGINEERING
CLASS CHAINS

TIDC INDIA

THE COMPLETE CHAIN COMPANY

TIDC INDIA

IMPROVED BUCKET ELEVATOR CHAINS FOR CEMENT PLANTS

TIDC has developed a truly remarkable line of bucket elevator chains designed especially for service in cement plants. These chains provide the highest ultimate and fatigue strengths available for this application.

These bucket elevator chains are made of specially selected alloy steel and they posses better ultimate strength ratings. Raw material is checked for dimensional and metallurgical parameters and then cleared for manufacturing.

.

Pitch holes in plates are produced by boring operation in a vertical milling machine. The holes produced by this process have 100% bearing area, smooth finish and high interference fits. Improved hole quality, combined with shot peening, yields maximum fatigue strength and protects against failure - even when chains are challenged by the most severe applications. The boring process also helps to maintain the pitch accuracy at the highest level, thereby giving consistency in chain length. The plates are through hardened to higher hardness levels for improved tensile strength.

Makino S33 - Vertical Milling Machine

Extra deep induction hardening of pins and carburizing of bushes provide unsurpassed wear life. The pins and bushes are CNC turned and provide ideal fit between mating parts. Due to the high hardness level maintained, these chains resist abrasion by cement. This also ensures maximum wear life and the toughness required to survive extended periods of service.

During design stage itself, Finite Element Analysis is used to analyze the stresses acting on the chain parts and suitable design considerations are made for increased life of the chain.

Chain assembly is done in stroke controlled hydraulic presses. Separate tooling used for inner block assembly and outer link assembly. This enables to maintain proper clearances and helps in better articulation of chain.

All chain components are checked and qualified for both dimensional and metallurgical requirements. Chains are pre loaded up to one third of the breaking load. Tensile strength of the chain is also checked and qualified.

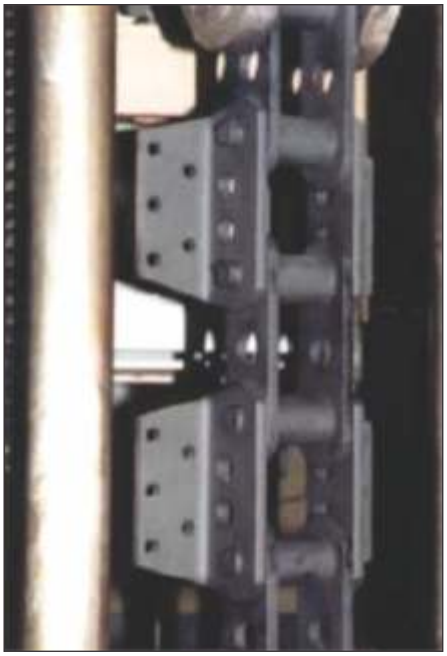

Fatigue testing is done to evaluate chain under the same cyclical loading conditions as found inside an elevator

Finite element analysis used during design of chain aids in improvement of fatigue strength for longer, trouble free life.

THE TIDC SOLUTION

- Maximum Strength
- High hardness to resist abrasion
- Precision manufacturing
- Exacting tolerance
- Smooth pitch holes for high interference fit and increased fatigue resistance
- Better quality

BUCKET ELEVATOR CHAINS (BACK MOUNTED)

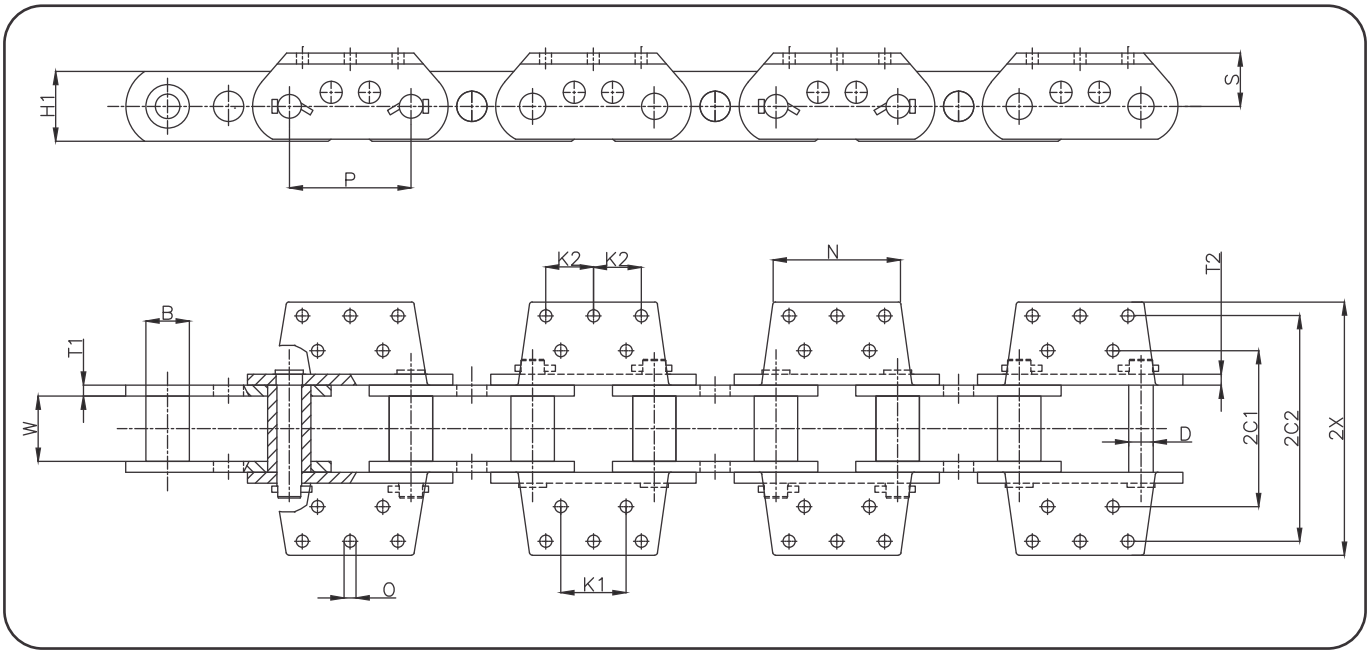

TIDC Model No	Pitch (P)	WIP (W)	Plate Height (H1)	I/P Thk. (T1)	O/P Thk. (T2)	Bush Diameter (B)	Pin Diameter (D)	Minimum Breaking Load, Kgf	Attachment Type	Attachment Height (S)	Transverse Pitch 1 (2C1)	Transverse Pitch 2 (2C2)	Att hole Pitch 1 (K1)	Att hole Pitch 2 (K2)	Att Hole Diameter (O)	Overall Width (2X)
S 16000 17 BE K2 1A	160.00	60.00	80.00	10.00	10.00	48.00	30.00	50000	K2	54.00	170.00	-	140.00	-	18.00	220.00
SP 0956	152.40	76.20	76.20	12.70	12.70	44.50	25.40	60000	K2	47.80	184.00	-	63.50	-	17.50	241.00
SP 0958	152.40	76.20	83.50	14.00	14.00	51.00	28.60	80000	K4	63.50	178.00	305.00	88.90	-	14.20	348.00
SP 4857	152.40	76.20	82.60	12.70	12.70	44.45	25.40	69600	K4	63.50	177.80	304.80	88.90	-	15.00	368.00
SP X856	152.40	76.00	63.50	12.70	12.70	44.50	25.40	53100	K2	47.65	183.00	-	64.00	-	17.50	236.00
SP 0984	177.80	95.30	102.00	16.00	16.00	63.50	34.90	100000	K5	76.20	228.00	330.00	95.30	69.85	17.50	370.00
SP 4864	177.80	95.30	101.60	16.00	16.00	60.30	31.75	110000	K5	76.20	228.60	330.20	95.30	69.85	17.50	383.00

BUCKET ELEVATOR CHAINS (SIDE MOUNTED)

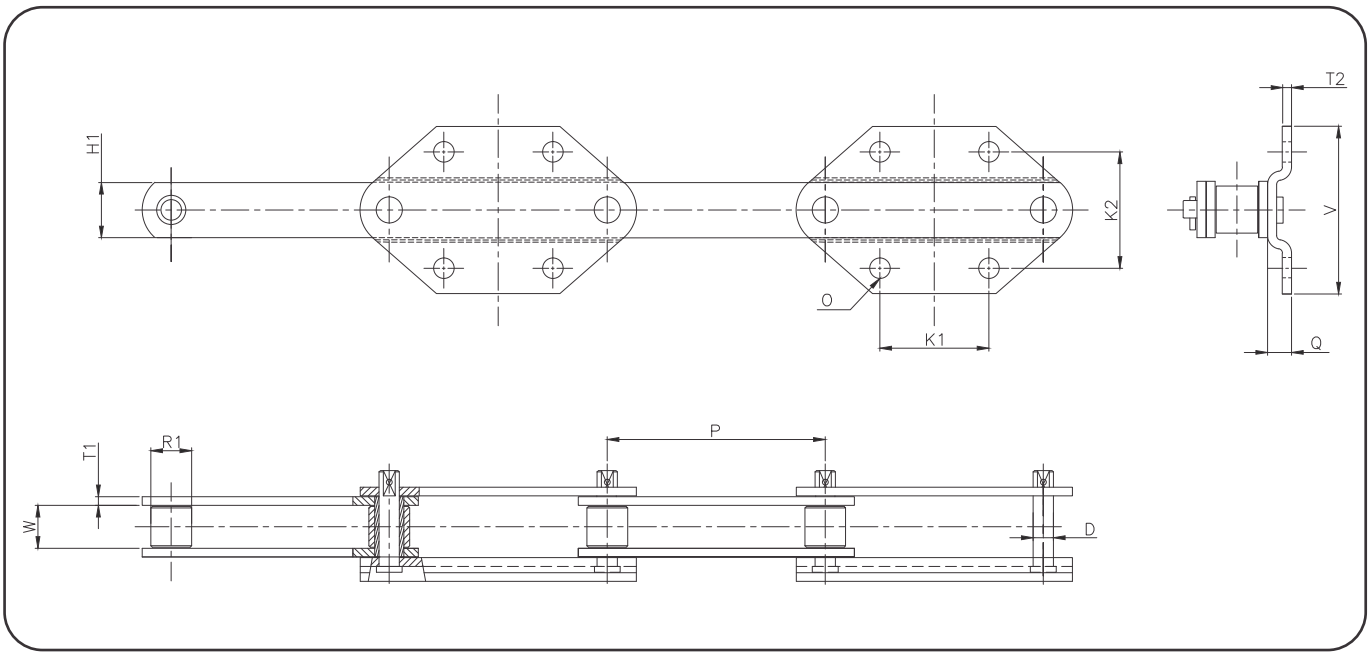

TIDC DRG. NO.	Pitch (P)	WIP (W)	Plate Height (H1)	I/P Thk. (T1)	O/P Thk. (T2)	Roller Diameter (R1)	Pin Diameter (D)	Minimum Breaking Load, Kgf	Attachment Type	Attachment Height (Q)	Att hole Pitch 1 (K1)	Att hole Pitch 2 (K2)	Att Hole Diameter (O)	Overall Width (V)
SP 2261	75.00	30.00	40.00	6.00	6.00	29.00	14.40	19000	G4	38.60	75.00	80.00	14.00	115.54
S 07620 18 BE G4 2A	76.20	36.50	45.00	8.00	8.00	35.00	15.80	28500	G4	46.50	75.00	80.00	14.00	116.00
S 10000 20 BE G4 2A	100.00	57.20	76.20	10.00	10.00	50.80	24.00	60000	G4	65.10	100.00	100.00	16.00	143.50
S 10000 37 BE G4 2A	100.00	57.20	63.50	10.00	10.00	50.80	24.00	48875	G4	63.50	100.00	100.00	16.00	144.00
S 10000 38 BE G4 2A	100.00	51.40	50.80	10.00	10.00	40.10	19.10	35000	G4	58.00	100.00	100.00	16.00	146.00
S 12500 04 BE G4 2A	125.00	51.40	50.80	10.00	10.00	40.10	19.10	39500	G4	60.00	125.00	110.00	18.00	146.00
S 12500 31 BE G4 2A	125.00	57.20	63.50	10.00	10.00	50.80	24.00	48875	G4	63.50	125.00	110.00	18.00	146.00
S 12500 43 BE G4 2A	125.00	68.00	90.00	12.00	12.00	63.50	32.00	73500	G4	59.00	125.00	130.00	18.00	180.00
S 15000 12 BE G4 1A	150.00	29.50	40.00	6.00	6.00	29.00	14.50	20000	G4	38.75	75.00	80.00	14.00	115.50
S 15000 24 BE G4 1A	150.00	29.80	40.00	6.00	6.00	26.50	14.50	20000	G4	38.75	75.00	80.00	14.00	115.50
S 16000 44 BE G4 1A	160.00	44.50	65.00	8.00	8.00	42.40	21.20	35000	G4	51.50	50.00	87.00	13.00	120.00
S 16000 54 BE G4 1A	160.00	46.00	75.00	10.00	10.00	49.25	25.40	75000	G4	59.00	80.00	92.00	15.00	129.60
SP 2267	175.00	88.00	110.00	15.00	15.00	85.00	42.00	166000	G4	38.50	175.00	150.00	25.00	220.00
S 20000 33 BE G4 2A	200.00	57.20	76.20	10.00	10.00	50.80	24.00	56400	G4	65.10	200.00	150.00	16.00	193.50
S 20000 49 BE G4 1A	200.00	51.40	50.80	10.00	10.00	40.10	19.10	35000	G4	58.00	100.00	100.00	16.00	146.00

DEEP BUCKET CONVEYOR CHAINS (DBC)

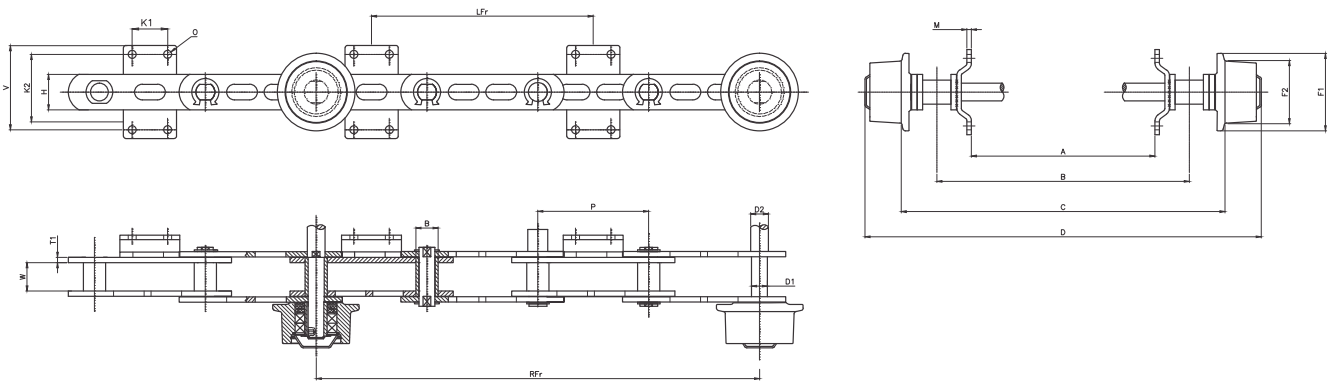

TIDC DRG. NO.	Pitch (P)	WIP (W)	Plate Height (H)	Plate Thk. (T1)	Att Plate Thk. (M)	Bush Diameter (B)	Pin Diameter (D1)	Shaft Diameter (D2)	Minimum Breaking Load, Kgs	Dist bet Att (LFr)	Dist bet Shafts (RFr)	Att hole Pitch 1 (K1)	Att hole Pitch 2 (K2)	Att Plate Width (V)	Att Hole Diameter (O)	Roller Flange Diameter (F1)	Roller Body Diameter (F2)	Dist bet att plates of two strands (A)	Dist bet two parallel chains (B)	Dist bet Roller ends of two chains (C)	Overall width (D)
S 16000 02 DBC OBR	160.00	45.00	90.00	10.00	10.00	60.00	25.40	40.00	55000	480	960	46.00	149.00	192.00	13.50	175.00	140.00	435.00	520.00	910.00	1036.00
SP 2362	250.00	80.00	106.00	16.00	12.00	60.80	40.00	45.00	90000	500	1000	80.00	150.00	190.00	18.00	175.00	140.00	812.00	998.00	1192.00	1333.00
S 25000 116 DBC OBR	250.00	64.00	80.00	12.00	10.00	50.00	36.00	40.00	40000	500	1000	80.00	152.40	192.00	18.00	175.00	140.00	1010.00	1165.00	1313.00	1450.00
SP 1818	315.00	81.00	100.00	12.00	10.00	54.00	36.00	40.00	70000	630	1260	115.00	170.00	210.00	18.00	175.00	140.00	1007.00	1216.00	1402.00	1566.00
SP 1866	315.00	80.00	101.00	14.00	12.00	54.00	36.00	40.00	80000	630	1260	115.00	170.00	210.00	18.00	175.00	140.00	1007.00	1216.00	1402.00	1566.00
SP 2195	315.00	80.00	120.00	14.00	12.00	54.00	36.00	40.00	125000	630	1260	115.00	170.00	213.00	18.00	175.00	140.00	1262.00	1466.00	1655.00	1792.00
S 31500 07 DBC OBR	315.00	80.00	100.00	16.00	10.00	54.00	36.00	40.00	125000	630	1260	115.00	170.00	210.00	18.00	175.00	140.00	1262.00	1468.00	1662.00	1822.00
S 31500 08 DBC OBR	315.00	80.00	100.00	14.00	10.00	54.00	36.00	40.00	87000	630	1260	115.00	170.00	210.00	18.00	175.00	140.00	1262.00	1466.00	1663.00	1800.00
S 31500 32 DBC OBR	315.00	80.00	90.00	12.00	10.00	54.00	36.00	40.00	55000	630	1260	115.00	170.00	210.00	18.00	175.00	140.00	1012.00	1216.00	1400.00	1537.00
S 31500 38 DBC OBR	315.00	81.00	100.00	12.00	10.00	54.00	36.00	40.00	67500	630	1260	115.00	170.00	220.00	18.00	175.00	140.00	1009.00	1190.00	1331.00	1421.00
S 31500 45 DBC OBR	315.00	55.00	65.00	8.00	10.00	36.00	26.00	30.00	40000	630	1260	115.00	171.00	212.00	18.00	125.00	101.00	1088.00	1215.00	1335.00	1470.0

DEEP PAN CONVEYOR CHAINS (DPC)

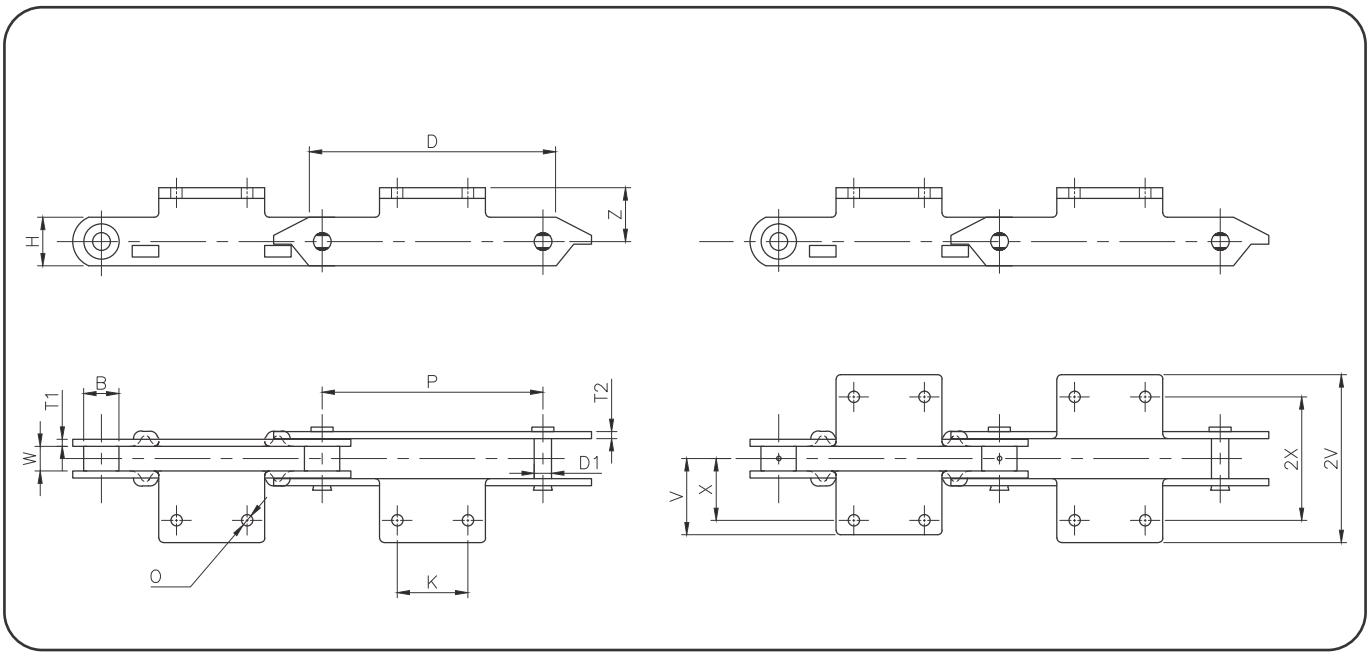

TIDC DRG. NO.	Pitch (P)	WIP (W)	Plate Height (H)	I/P Thk. (T1)	O/P Thk. (T2)	Bush/ Roller Diameter (B)	Pin Diameter (D)	Minimum Breaking Load, Kgs	Att. Type	Att. Height (Z)	Att. hole pitch (K)	Trans. Pitch 1 (X)	Trans Pitch 2 (2X)	Att. Plate overall Width (V)	Att. Plate overall Width (2V)	Att. Hole Diameter (O)
SP 2233	250.00	45.00	65.00	10.00	10.00	40.00	26.00	40000	K2	57.50	75.00	-	148.00	-	194.00	14.00
SP 2304	250.00	45.00	65.00	10.00	10.00	40.00	26.00	40000	A2	59.50	80.00	70.00	-	95.50	-	14.00
S 25000 46 DPC A2 1L	250.00	45.00	65.00	8.00	8.00	35.00	26.00	25000	A2	59.50	80.00	70.00	-	90.00	-	14.00
S 25000 49 DPC A2 1L	250.00	70.00	90.00	12.00	12.00	54.00	34.00	60000	A2	70.00	80.00	85.00	-	110.00	-	17.00
S 25000 69 DPC K2 1L	250.00	62.50	90.00	21.00	12.00	63.50	32.00	75000	K2	71.00	70.00	-	145.00	-	197.00	13.40
S 25000 94 DPC A2 1L	250.00	65.00	90.00	12.00	12.00	44.00	29.50	70000	A2	70.00	75.00	87.50	-	117.50	-	14.00
S 25000 107 DPC K2 1L	250.00	28.00	55.00	8.00	8.00	40.00	19.50	12000	K2	61.00	80.00	-	140.00	-	190.00	13.00
S 25000 115 DPC A2 1L	250.00	60.00	90.00	12.00	12.00	44.00	29.50	75000	A2	70.00	80.00	70.00	-	95.00	-	13.00
S 25000 142 DPC A2 1L	250.00	45.00	75.00	10.00	10.00	40.00	26.00	50000	A2	65.00	80.00	74.00	-	96.50	-	14.00
S 25000 143 DPC A2 1L	250.00	60.00	80.00	12.00	12.00	40.00	24.50	70000	A2	65.00	75.00	85.00	-	115.00	-	14.00
S 25000 144 DPC A2 1L	250.00	45.00	70.00	10.00	10.00	40.00	26.00	40000	A2	60.00	75.00	75.00	-	97.50	-	14.00

SCRAPPER RECLAIMER CHAINS
(INTEGRAL ATTACHMENT)

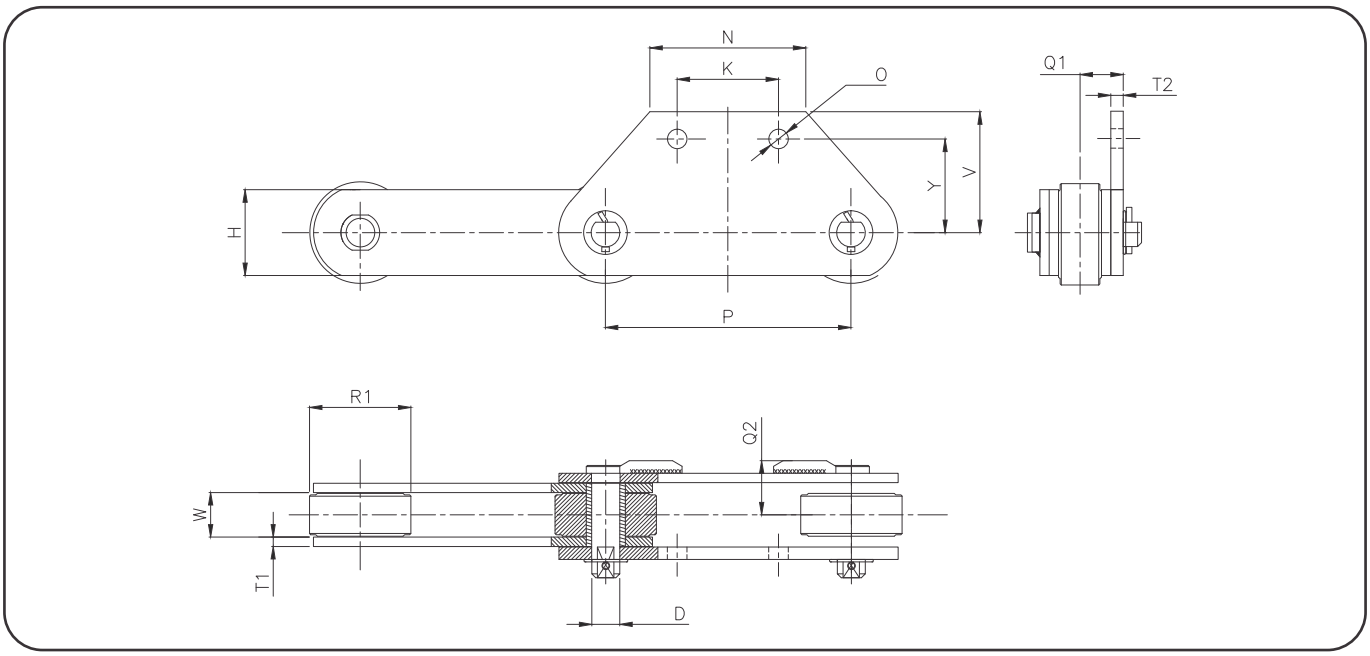

TIDC DRG. NO.	Pitch (P)	WIP (W)	Plate Height (H)	I/P Thk. (T1)	Lug Plate Thk. (T2)	Roller Diameter (R1)	Pin Diameter (D)	Minimum Breaking Load, Kgs	Att. type	Att. Height (Q1)	Wear Pad Height from Chain Center (Q2)	Att. Hole Pitch (K)	Att Hole Diameter (O)	Att. Hole Height from Chain Center (Y)	Overall Height (V)
SP 2447	250.00	32.00	50.00	10.00	12.00	60.00	20.00	25000	M2	40.00	-	90.00	20.00	80.00	119.00
SP 2402	250.00	37.10	50.00	10.00	12.00	60.00	19.70	32000	M2	42.30	-	90.00	21.00	79.00	120.00
S 25000 98 SR SM2 1A	250.00	40.00	50.00	8.00	10.00	65.00	20.00	20000	M2	39.50	47.50	90.00	21.00	95.00	125.00
SP 2397	250.00	40.00	57.00	8.00	10.00	85.00	21.00	40000	M2	45.00	55.00	130.00	21.00	95.00	125.00
S 25000 28 SR SM2 1A	250.00	50.00	75.00	12.00	16.00	120.00	28.00	65000	M2	54.00	66.00	130.00	25.00	120.00	155.00
S 25000 60 SR SM2 1A	250.00	38.00	65.00	14.00	16.00	95.00	27.00	75000	M2	51.50	59.50	130.00	20.50	95.00	120.00
S 31500 02 SR SM2 1A	315.00	50.00	80.00	12.00	16.00	120.00	32.00	60000	M2	54.75	66.75	130.00	25.00	120.00	155.00
S 31500 52 SR SM2 1A	315.00	57.15	110.00	12.00	16.00	130.00	36.00	90000	M2	57.50	70.50	130.00	25.00	120.00	155.00
S 31500 04 SR SM2 1A	315.00	61.00	100.00	16.00	16.00	115.00	40.00	110000	M2	65.00	81.00	110.00	21.00	107.00	130.00
S 31500 22 SR SM2 1A	315.00	70.00	100.00	16.00	16.00	140.00	36.00	130000	M2	68.75		130.00	25.00	135.00	165.00
SP 2366	315.00	88.00	120.00	20.00	20.00	140.00	50.00	170000	M2	65.00	102.50	250.00	25.00	130.00	160.00
S 31500 59 SR SM2 1A	315.00	88.00	125.00	20.00	20.00	150.00	50.00	200000	M2	65.00	102.50	250.00	25.00	130.00	160.00

FLOW CONVEYOR CHAINS

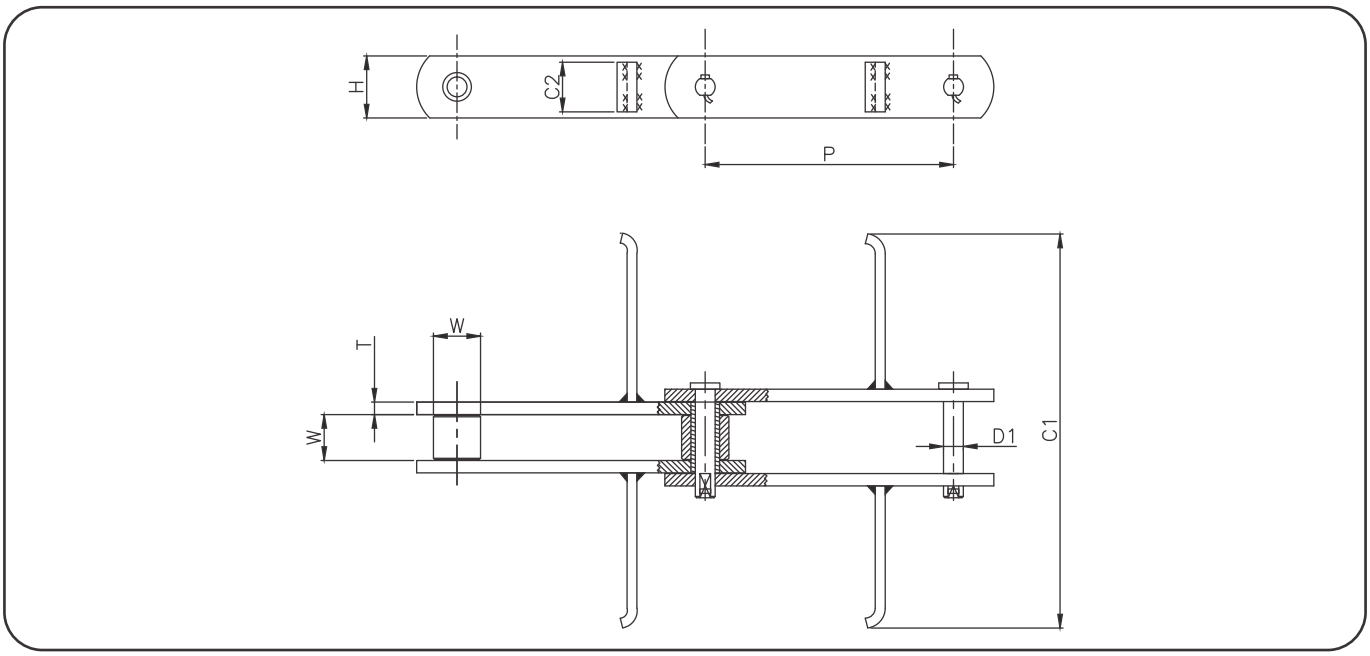

Chain No.	Pitch P	Roller Dia R	WIP W	Plate Height H	Plate Thickness T	Average Breaking Load KGF	Minimum Breaking Load KGF	Pin Diameter D1	Attachment Length C1	Attachment Width C2
S 07500 30KN	75.00	15.90	16.10	22.00	3.0	3000	2550	8.0	95	20
S 10160 55KN	101.60	20.10	22.60	25.40	5.0	5500	4675	9.7	135	22
S 10160 80KN	101.60	22.20	27.00	28.60	6.0	8000	6800	11.3	135	25
S 12500 80KN	125.00	22.20	27.00	28.60	6.0	8000	6800	11.3	185	25
S 12500 115KN	125.00	29.00	30.00	40.00	6.0	11500	9775	14.5	185	34
S 12500 115KN 01	125.00	29.00	30.00	40.00	6.0	11500	9775	14.5	225	34
SP 2230	125.00	25.00	28.00	32.00	6.0	11750	10000	11.2	185	28
S 15000 115KN	150.00	29.00	30.00	40.00	6.0	11500	9775	14.5	250	34
S 15000 115KN 01	150.00	29.00	30.00	40.00	6.0	11500	9775	14.5	300	34
S 15240 190KN	152.40	34.90	37.10	44.50	8.0	19000	16150	15.9	250	40
S 20000 190KN	200.00	34.90	37.10	44.50	8.0	19000	16150	15.9	330	40
SP 2291	200.00	38.10	37.10	50.00	10.0	28500	24225	15.9	330	40
S 20000 250KN	200.00	40.10	51.40	50.00	10.0	25000	21250	19.1	330	46
S 20000 250KN 01	200.00	40.10	51.40	50.00	10.0	25000	21250	19.1	430	46
S 20000 320KN	200.00	44.50	57.20	63.50	10.0	32000	27200	22.2	430	58

SCRAPPER RECLAIMER CHAINS
(WELDED ATTACHMENT)

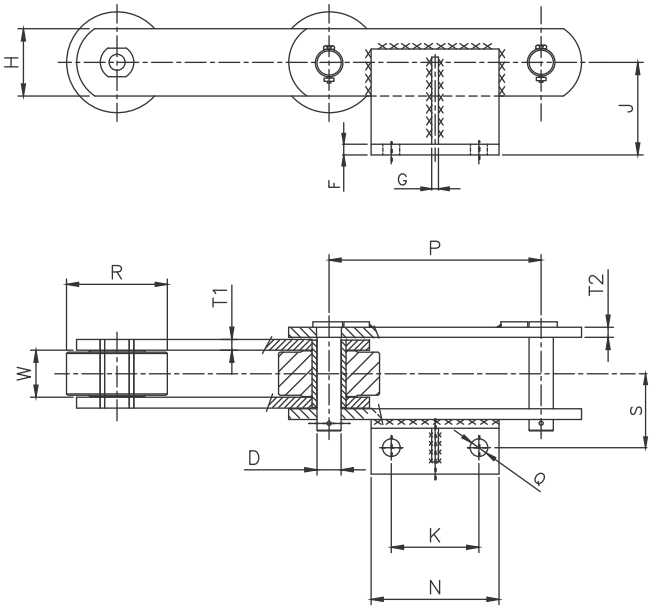

TIDC DRG. NO.	Pitch (P)	WIP (W)	Plate Height (H)	I/P Thk. (T1)	O/P Thk. (T2)	Roller Diameter (R)	Pin Diameter (D)	Minimum Breaking Load, Kgs	Att. Type	Att. Height (J)	Chain Center to Att. Hole center (S)	Att. Hole Pitch (K)	Att. Hole Diameter (Q)	Att. Length (N)	Rib thk (G)	Att. Thk. (F)
SP 1970	315.00	70.00	100.00	15.00	15.00	130.00	36.00	100000	WA2	140.00	117.50	130.00	25.00	190.00	10.00	12.00
SP 2297	250.00	39.50	60.00	12.00	12.00	85.00	28.00	51000	WA2	130.00	95.00	100.00	22.00	160.00	12.00	12.00
S 25000 02 SR WA2 1A	250.00	50.00	75.00	16.00	16.00	85.00	34.00	75000	WA2	130.00	105.00	100.00	21.00	160.00	16.00	16.00
S 25000 30 SR WA2 1A	250.00	50.00	80.00	12.00	12.00	100.00	36.00	50000	WA2	109.00	101.50	79.50	25.50	151.00	10.00	12.00
S 25000 51 SR WA2 1A	250.00	48.00	70.00	10.00	10.00	100.00	25.00	40000	WA2	110.00	90.50	90.00	22.00	140.00	10.00	10.00
S 25000 119 SR WA2 1A	250.00	40.00	70.00	10.00	10.00	100.00	30.00	35000	WA2	140.00	85.00	90.00	21.00	150.00	10.00	10.00
S 25000 141 SR WA2 1A	250.00	66.00	100.00	14.00	14.00	120.00	36.00	63000	WA2	140.00	113.00	80.00	25.00	140.00	10.00	12.00
S 31500 06 SR WA2 1A	315.00	52.00	80.00	12.00	12.00	120.00	35.70	60000	WA2	140.00	90.00	130.00	21.00	190.00	10.00	12.00
S 31500 27 SR WA2 1A	315.00	52.00	100.00	12.00	12.00	120.00	36.00	65000	WA2	140.00	90.00	130.00	25.00	190.00	12.00	16.00
S 31500 43 SR WA2 1A	315.00	70.00	110.00	15.00	15.00	150.00	38.00	110000	WA2	140.00	117.50	130.00	25.00	220.00	10.00	12.00

FORGED LINK DRAG CHAINS

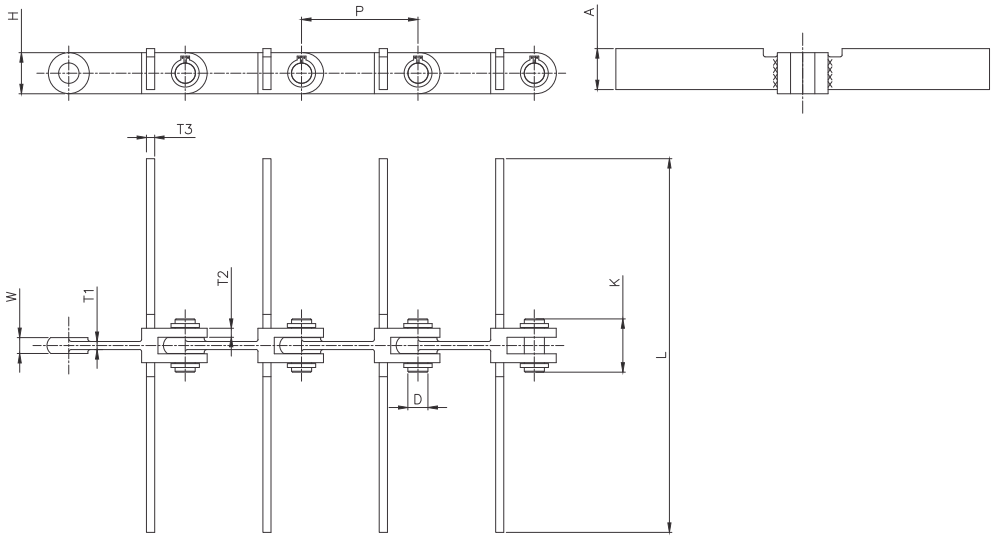

TIDC MODEL NO.	Pitch (P)	Width of Inner Link (W)	Link Height (H)	Link Thk 1 (T1)	Link Thk 2 (T2)	Pin Diameter (D)	Minimum Breaking Load, Kgf	Attachment Thk. (T3)	Attachment width (A)	Pin Height (K)	Overall Length (L)
SP 2279	142.00	29.50	50.00	16.00	16.00	24.50	40000	10.00	50.00	85.00	456.00
SP 2280	142.00	19.50	50.00	11.00	11.00	24.50	30000	10.00	50.00	65.00	456.00
S 14200 55 FG WK0 1L	142.00	19.50	50.00	11.00	11.00	24.50	30000	12.70	50.00	65.00	264.00

ATTACHMENT CHAINS

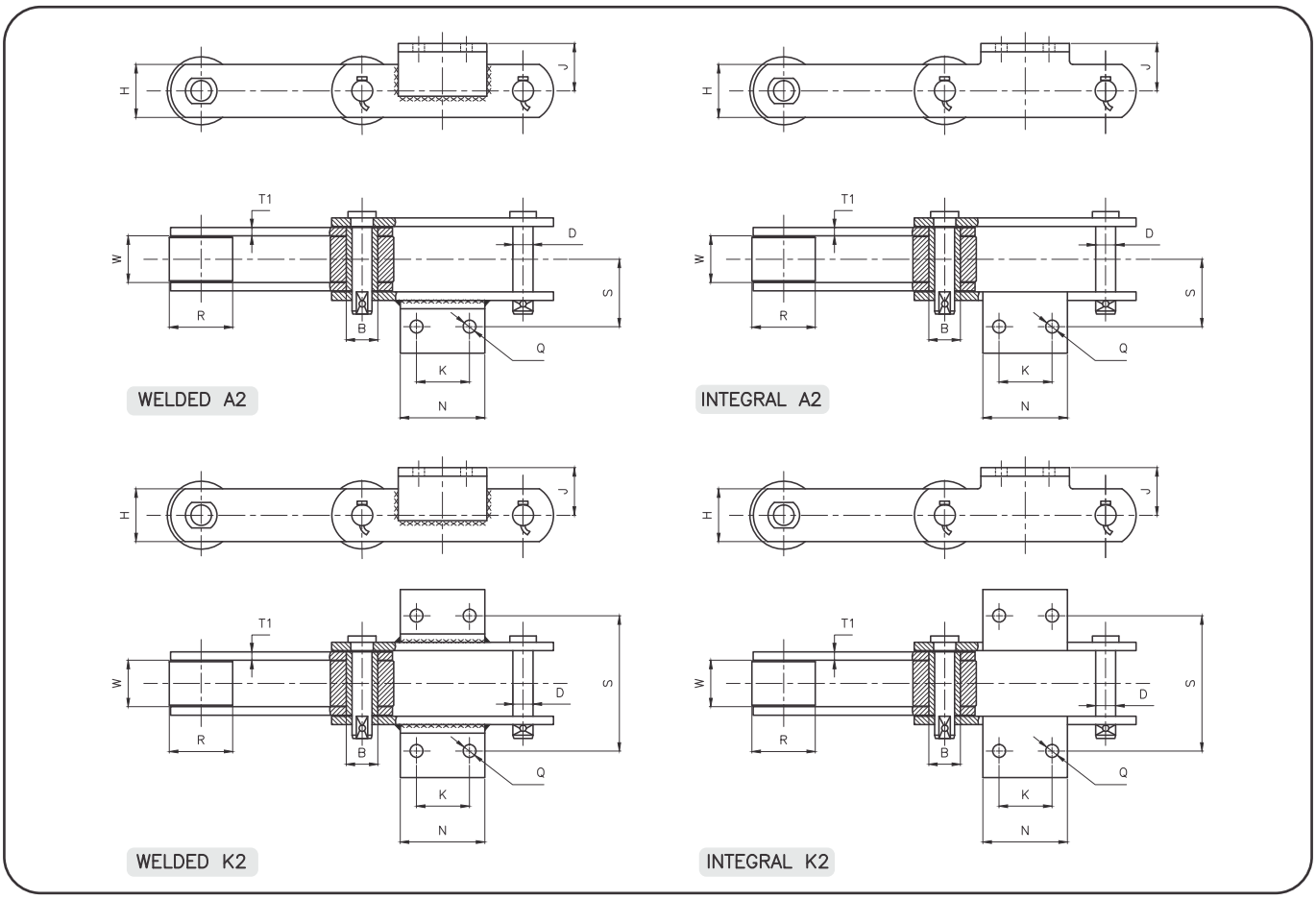

Att. Type	TIDC DRG. NO.	Pitch (P)	WIP (W)	Plate Height (H)	I/P Thk. (T1)	O/P Thk. (T2)	Roller Diameter (R)	BUSH Diameter (B)	Pin Diameter (D)	Minimum Breaking Load, Kgs	Att. Height (J)	Chain Center to Att. hole center (S)	Att. Hole Pitch (K)	Att. Hole Diameter (Q)	Att. Length (N)
Welded A2 type	S 12000 02 BE WA2 3L	125.00	45.00	50.00	8.00	8.00	60.00	--	21.00	18000	55.00	75.00	30.00	11.00	60.00
	S 12500 58 BE WA2 3L	125.00	45.00	50.00	8.00	8.00	60.00	--	21.00	18000	55.00	75.00	30.00	11.00	60.00
	S 15000 28 BE WA2 1A	150.00	40.00	65.00	8.00	8.00	--	30.00	22.00	25000	40.00	76.50	45.00	14.00	80.00
	S 15240 67 BE WA2 3L	152.40	30.00	50.00	5.00	5.00	--	32.00	25.00	15000	40.00	65.00	50.00	14.00	90.00
Welded K2 type	SP 2314	152.40	47.50	50.00	8.00	8.00	60.00	--	18.50	40000	50.00	126.00	45.00	11.00	80.00
	S 10000 67 BE WK2 2A	100.00	37.00	50.00	8.00	8.00	--	25.00	17.74	17000	40.00	128.00	40.00	10.00	65.00
	S 10160 08 BE WK2 1A	101.60	34.70	45.00	6.00	6.00	36.00	--	18.00	20000	39.50	100.00	30.00	11.00	55.00
	S 10160 15 BE WK2 1A	101.60	26.00	40.00	6.00	6.00	48.00	--	14.00	12750	40.00	120.00	30.00	12.00	55.00
	S 10160 72 BE WK2 2A	101.60	57.00	50.00	10.00	10.00	--	35.00	16.00	20000	35.00	135.00	45.00	10.00	70.00
	S 12500 28 BE WK2 2A	125.00	37.00	50.00	8.00	8.00		28.00	18.00	15000	40.00	190.00	50.00	14.00	86.00
	S 15000 23 BE WK2 1A	150.00	34.00	50.00	8.00	8.00	--	28.00	17.90	28000	35.00	130.00	67.00	10.50	115.00
	S 15240 04 BE WK2 1A	152.40	50.00	50.00	8.00	8.00		35.00	19.05	24000	35.00	134.00	44.45	10.50	84.00
Integral A2 type	SP 2353	152.40	37.10	50.00	10.00	10.00	70.00		19.10	30000	35.00	65.00	60.00	15.00	100.00
	S 12500 15 BE A2 1A	125.00	28.00	28.00	6.00	6.00	25.00		11.30	10000	28.50	50.50	50.00	12.00	80.00
	S 15240 10 BE A2 5L	152.40	50.80	76.20	10.00	10.00		44.45	25.40	45000	70.00	84.30	63.50	18.00	150.00
	S 30000 01 BE A2 1L	300.00	67.40	80.00	12.00	12.00	125.00		25.40	60000	70.00	100.00	110.00	18.00	170.00
Integral K2 type	S 07620 36 BE K2 2A	76.20	27.00	25.00	5.00	5.00	32.00		16.00	10000	25.00	81.00	40.00	11.00	60.00
	S 10000 31 BE K2 1A	100.00	30.00	50.00	6.00	6.00	30.00		16.00	25000	35.00	96.00	40.00	10.00	60.00
	S 10160 04 BE K2 2A	101.60	54.00	40.00	10.00	10.00		25.40	15.90	18150	25.40	135.00	44.50	11.00	75.00
	S 10200 01 BE K2 2A	102.00	26.00	50.00	6.00	6.00	70.00		21.50	12000	35.00	135.00	45.00	12.00	75.00
	S 12500 30 BE K2 2A	125.00	30.00	40.00	6.30	6.30	29.00		14.50	22500	28.00	100.00	50.00	12.00	75.00
	S 15240 30 BE K2 1A	152.40	66.00	50.00	10.00	10.00		36.00	19.00	27000	38.50	158.00	60.00	15.00	115.00
	S 16000 17 BE K2 1A	160.00	60.00	80.00	10.00	10.00		48.00	30.00	50000	54.00	170.00	140.00	18.00	180.00
	S 25000 72 BE K2 1A	250.00	57.20	63.50	10.00	10.00	44.50		22.20	27000	55.00	160.00	125.00	15.00	170.00

CHAINS FOR SPECIAL APPLICATIONS

APRON FEEDER CHAIN

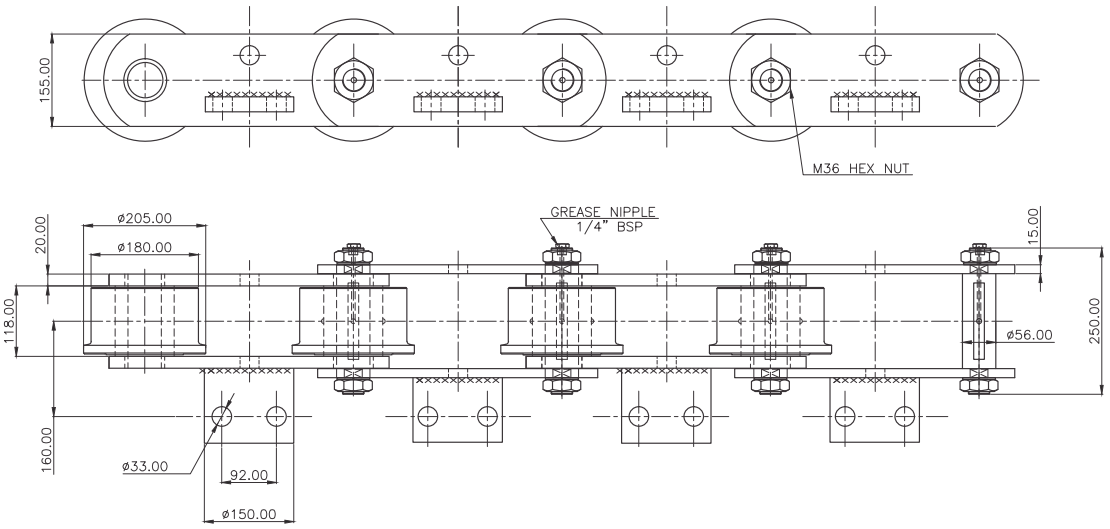

TIDC MODEL :S 35000 04 FR WA2 1L

MINIMUM BREAKING LOAD = 2,00,000 KGS.

APRON FEEDER CHAIN

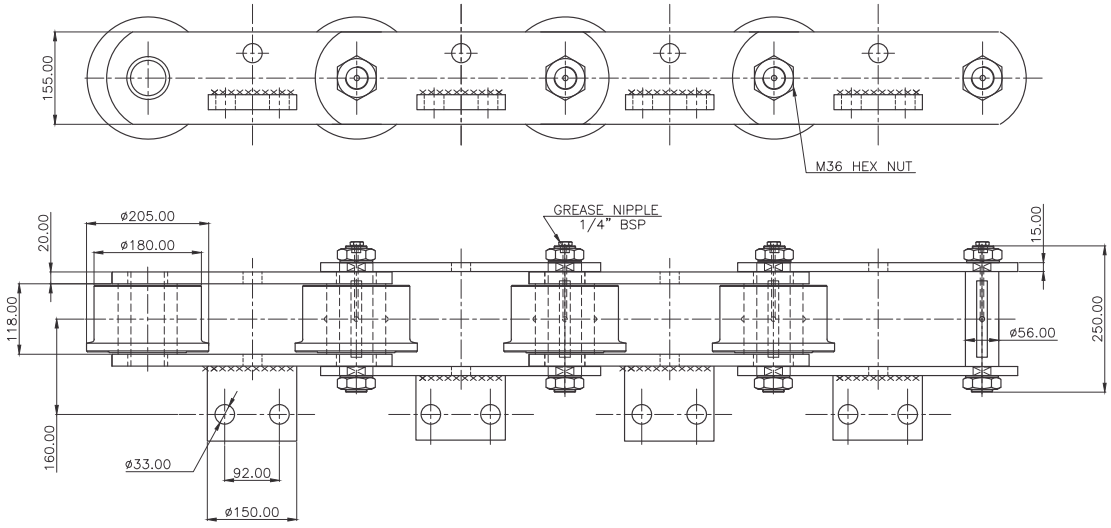

TIDC MODEL :S 35000 04 FR WA2 1L

MINIMUM BREAKING LOAD = 2,00,000 KGS.

CHAINS FOR SPECIAL APPLICATIONS

APRON FEEDER CHAIN

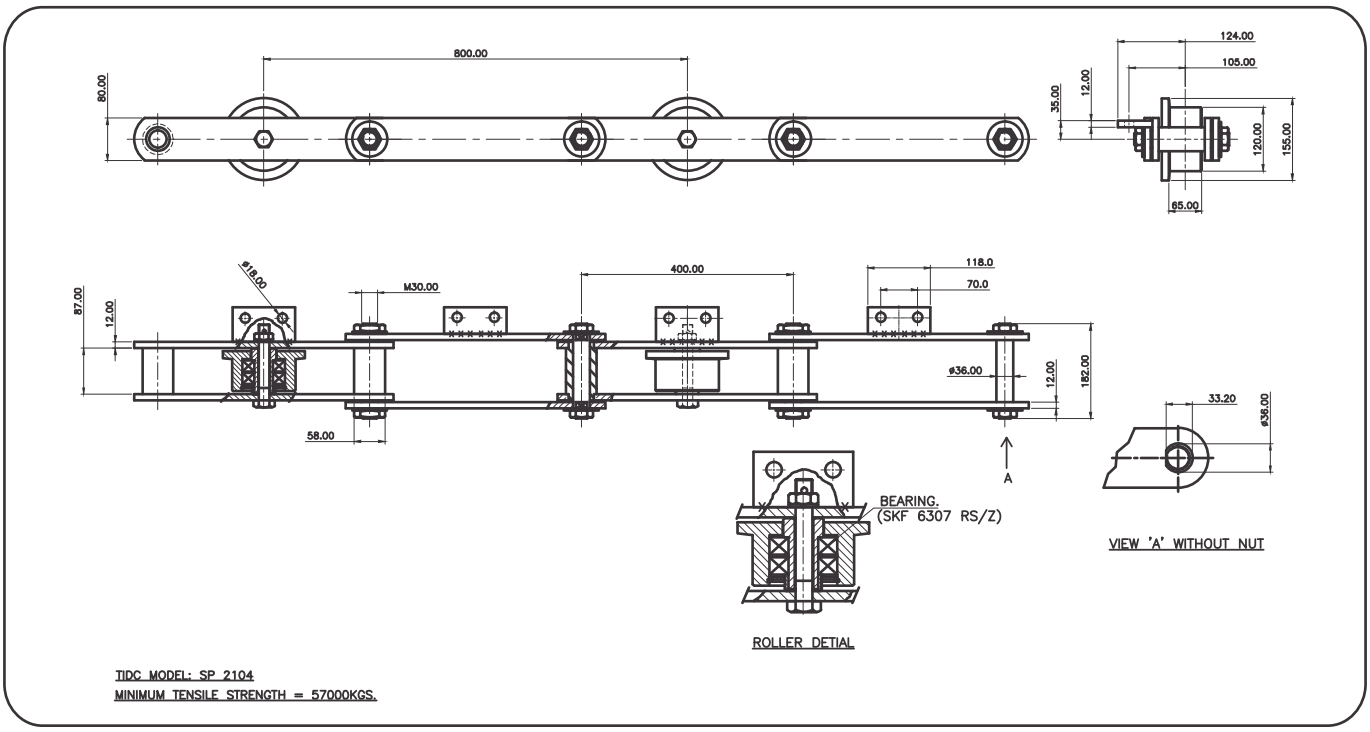

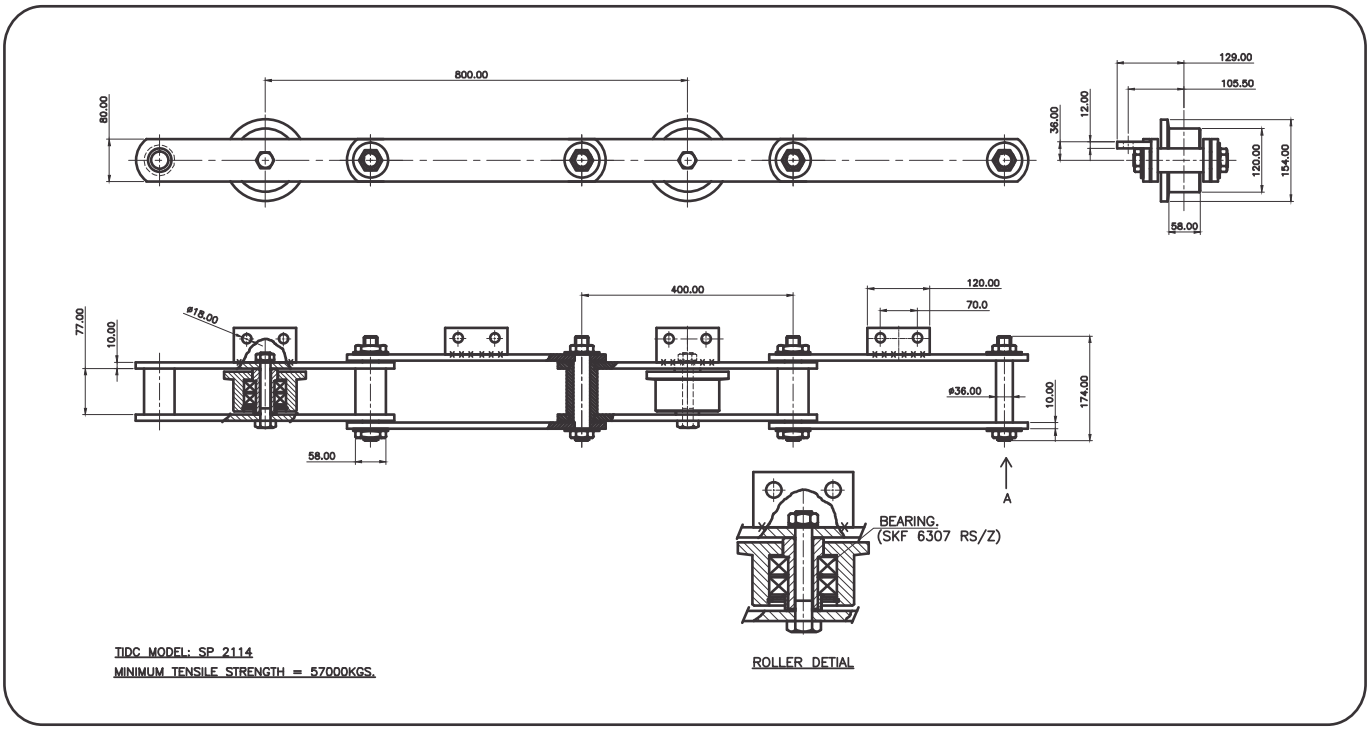

CHAINS FOR SPECIAL APPLICATIONS

DRAG FEEDER CHAIN

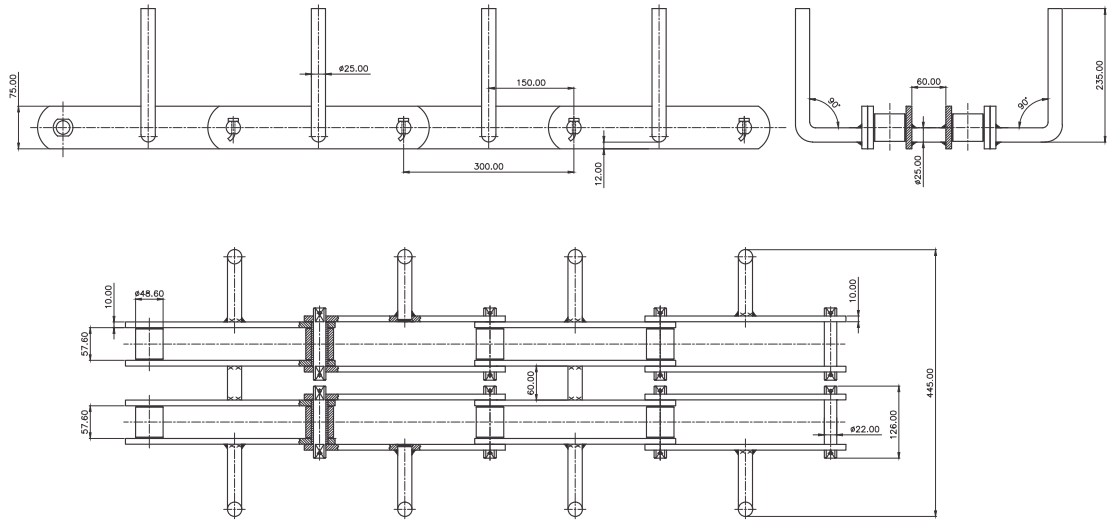

TIDC MDEL: S 30000 32 FC BLO 1L
MINIMUM BREAKING LOAD = 60,000 Kgf.

ROPEWAY CONVEYOR CHAIN

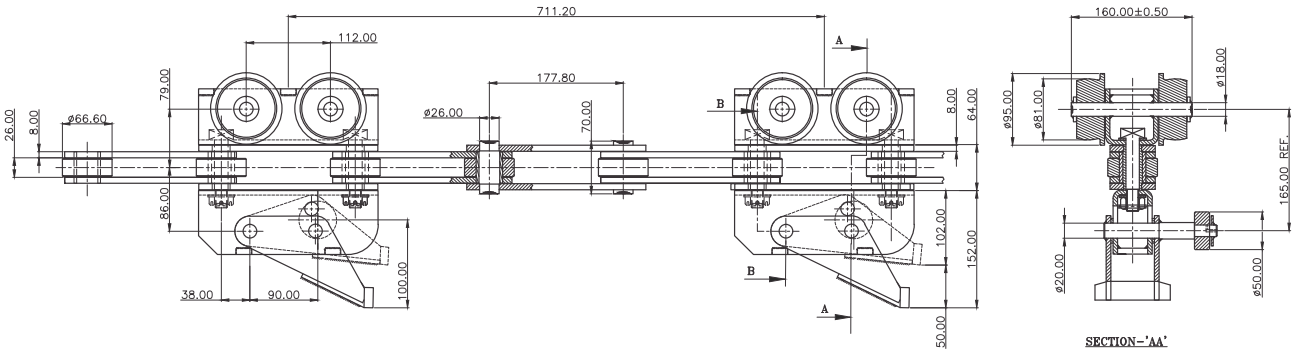

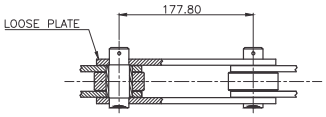

TIDC MODEL: SP 2288
MINIMUM BREAKING LOAD = 150 KN.

CHAINS FOR SPECIAL APPLICATIONS

LIMESTONE RECLAIMER CHAIN

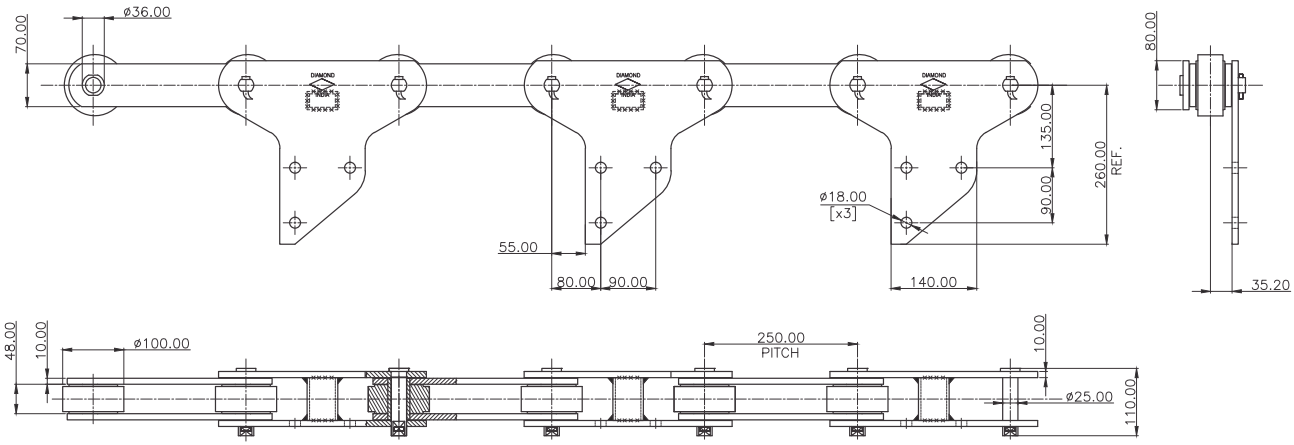

TIDC MODEL: SP 2192

MINIMUM BREAKING LOAD= 355 KN.

LIMESTONE RECLAIMER CHAIN

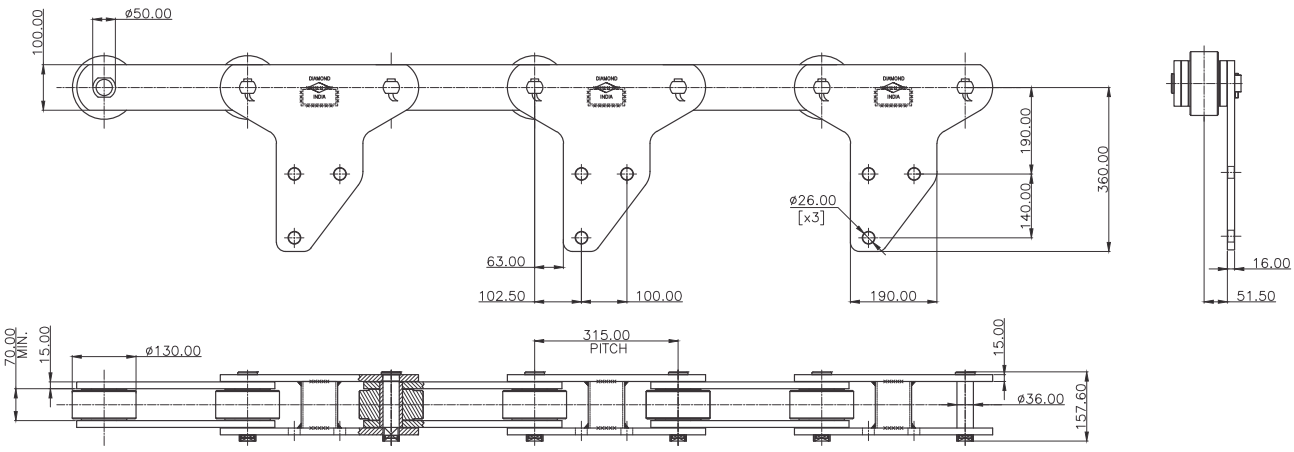

TIDC MODEL: SP 2193

MINIMUM BREAKING LOAD= 900 KN.

CHAINS FOR SPECIAL APPLICATIONS

BUCKET ELEVATOR CHAIN

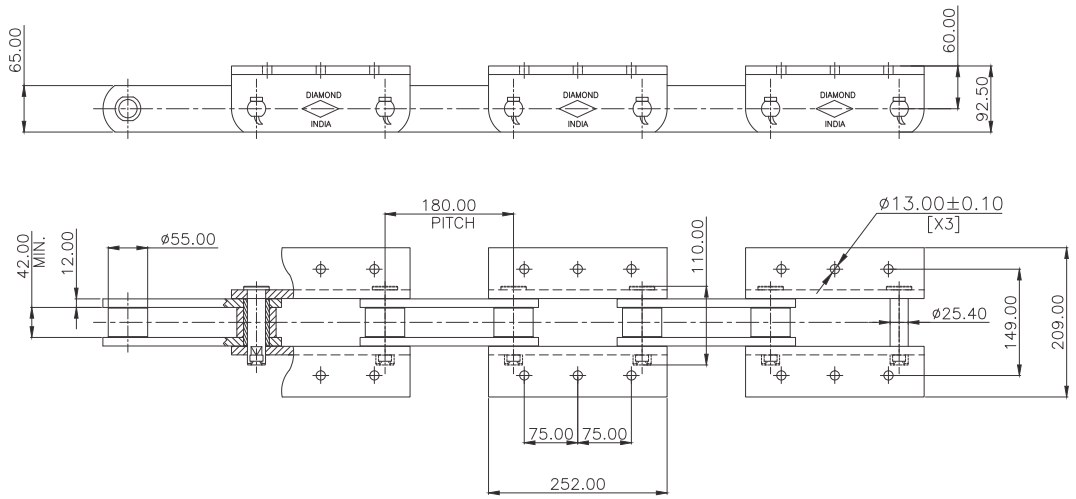

TIDC MODEL: SP 2207

MINIMUM BREAKING LOAD = 40,000 KGF.

SCRAPPER RECLAIMER CHAIN

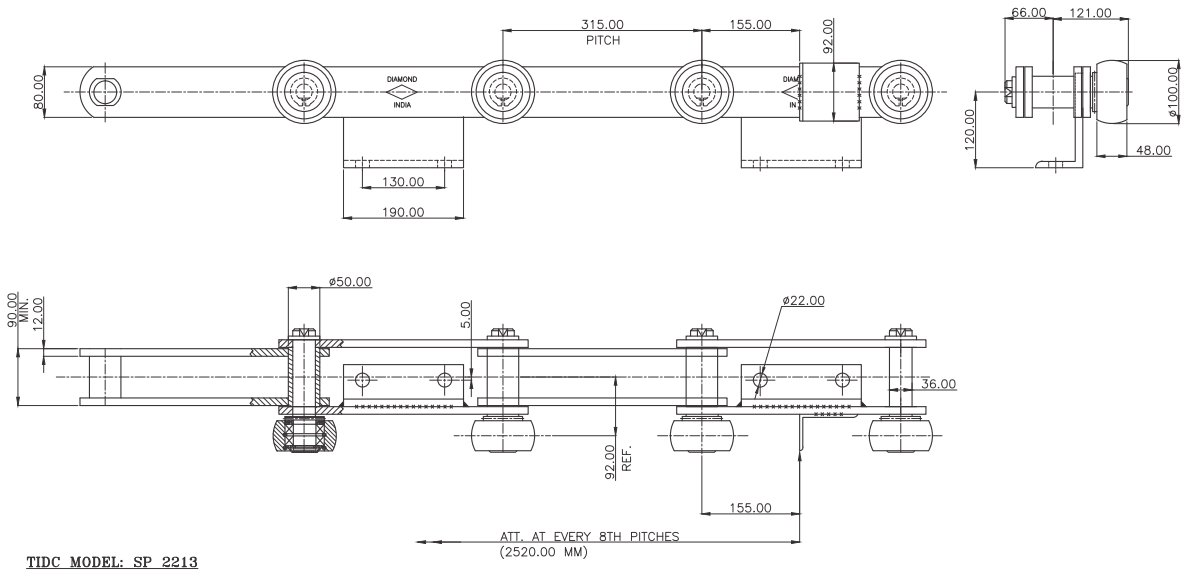

TIDC MODEL: SP 2213

MINIMUM BREAKING LOAD: 55,000 KGF

CHAINS FOR SPECIAL APPLICATIONS

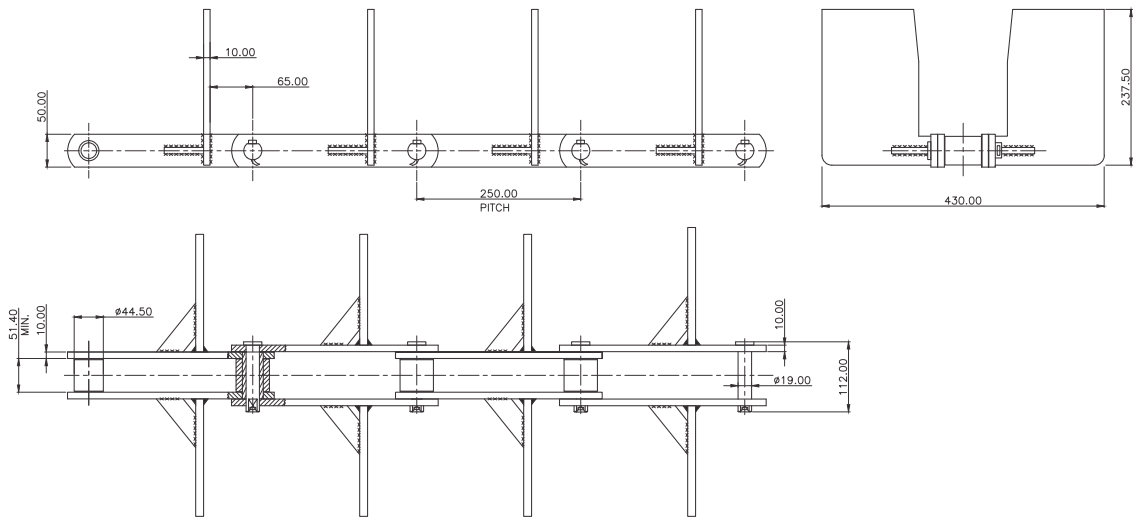

TIDC MODEL: SP 2268

MINIMUM TENSILE STRENGTH = 35,000 KGF

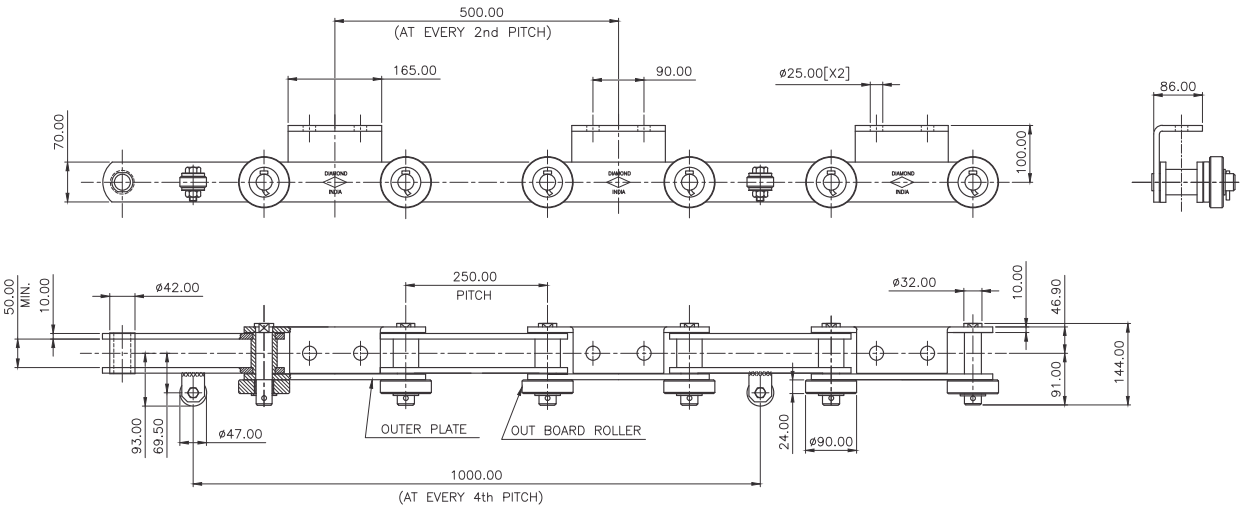

TIDC MODEL: SP 2388

MINIMUM BREAKING LOAD= 45,000 KGF.

CHAINS FOR SPECIAL APPLICATIONS

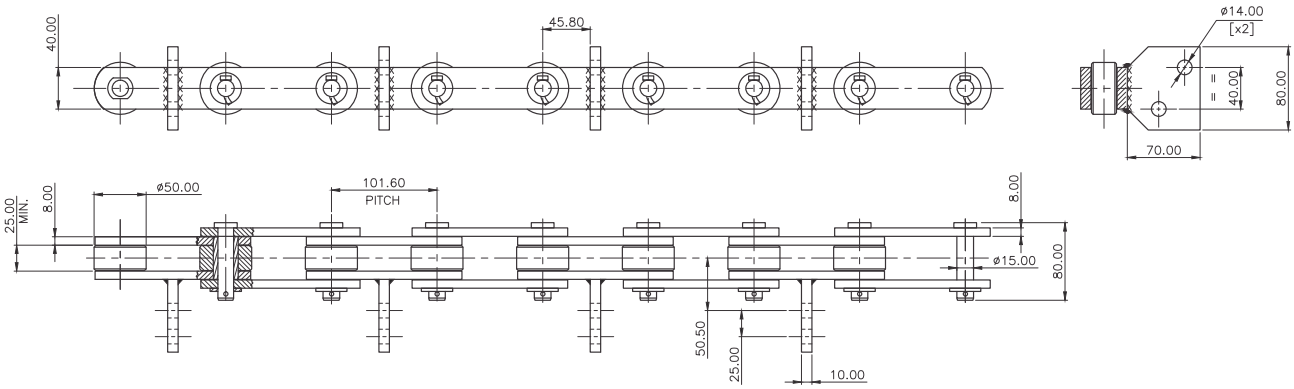

TIDC MODEL: S 10160 13 DC WA2 1I

MINIMUM BREAKING LOAD = 15000 KGF

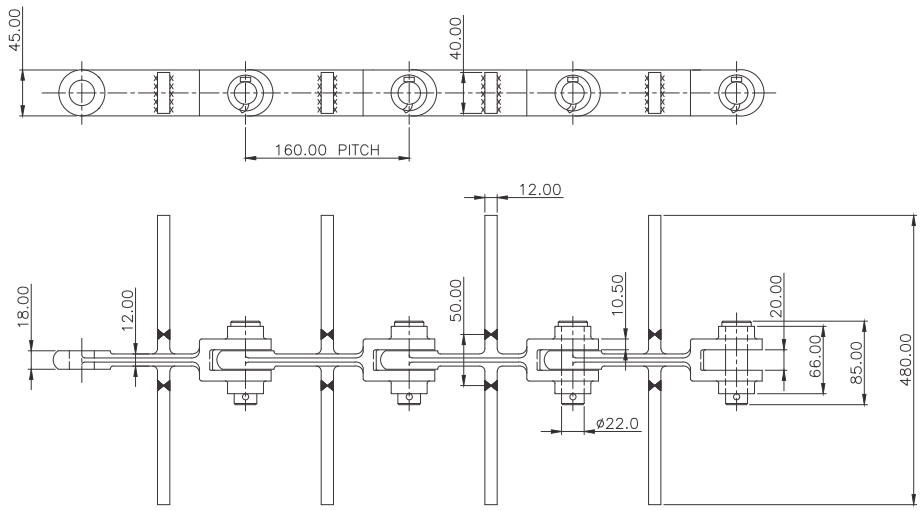

TIDC MODEL: S 16000 58 FG BL 1L

MINIMUM BREAKING LOAD = 35,000 KGF

CHAINS FOR SPECIAL APPLICATIONS

BUCKET ELEVATOR CHAIN

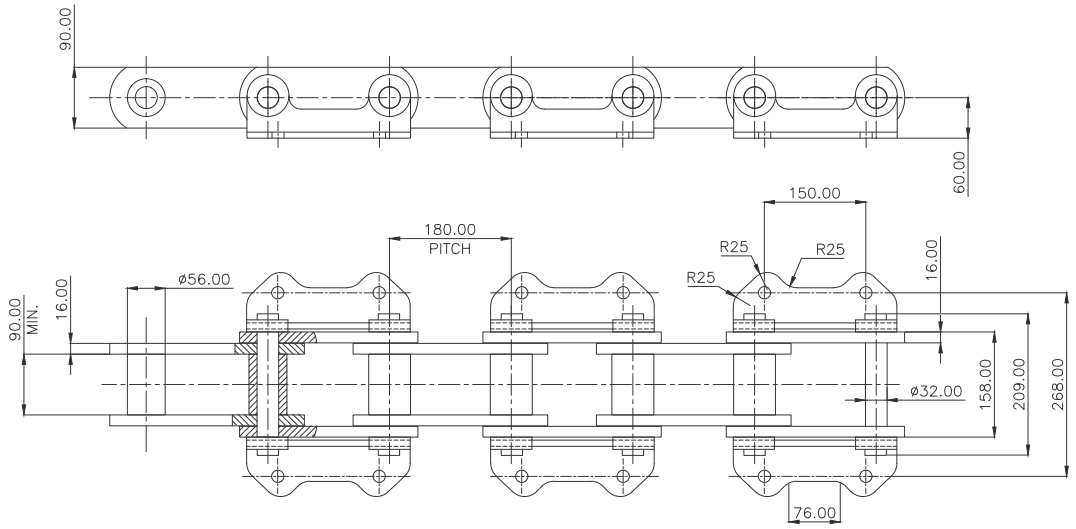

TIDC MODEL: S 18000 04 BE BK2 1A

MINIMUM BREAKING LOAD= 60000 KGS.

BUCKET ELEVATOR CHAIN

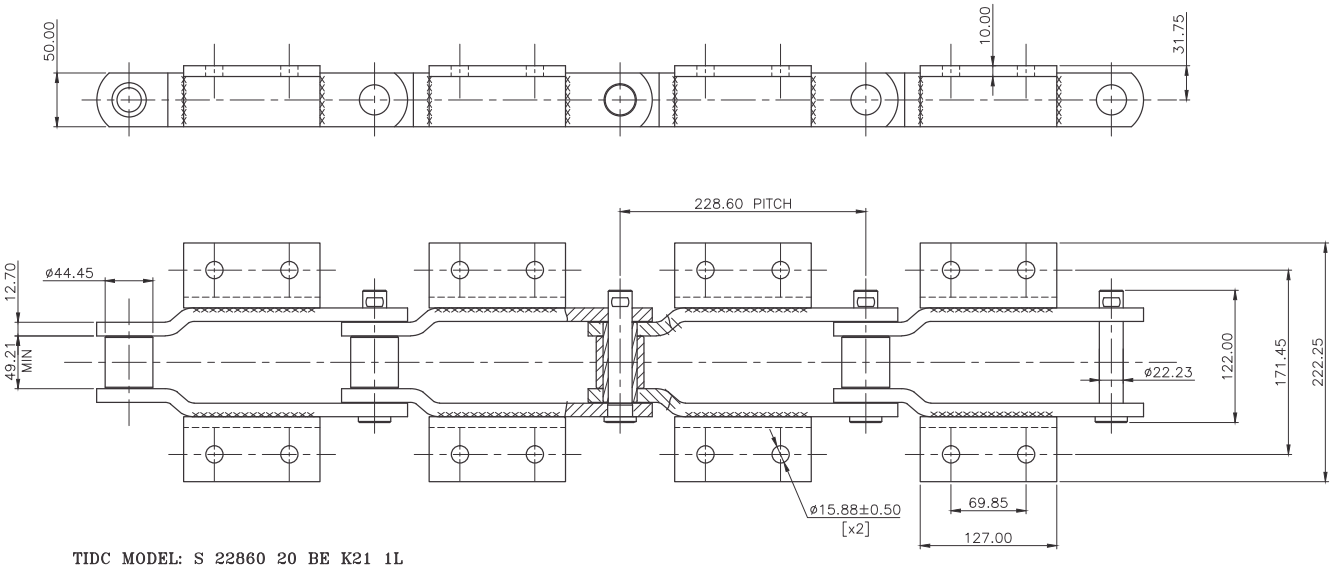

TIDC MODEL: S 22860 20 BE K21 1L

MINIMUM TENSILE STRENGTH = 24,500 KGF

CHAINS FOR SPECIAL APPLICATIONS

COAL FEEDER CHAIN

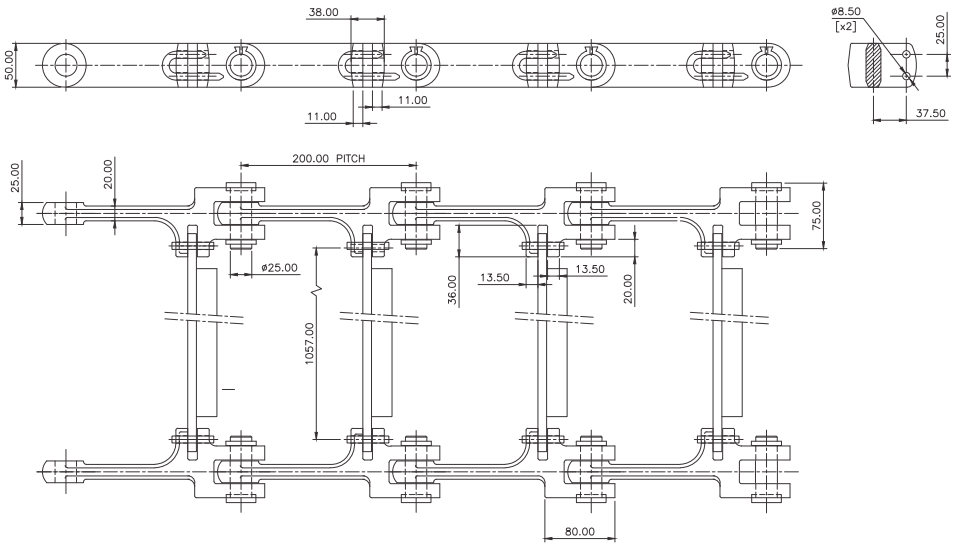

TIDC MODEL: S 20000 64 FG AT

MINIMUM TENSILE STRENGTH = 30,000 KGF.

SCRAPPER RECLAIMER CHAIN

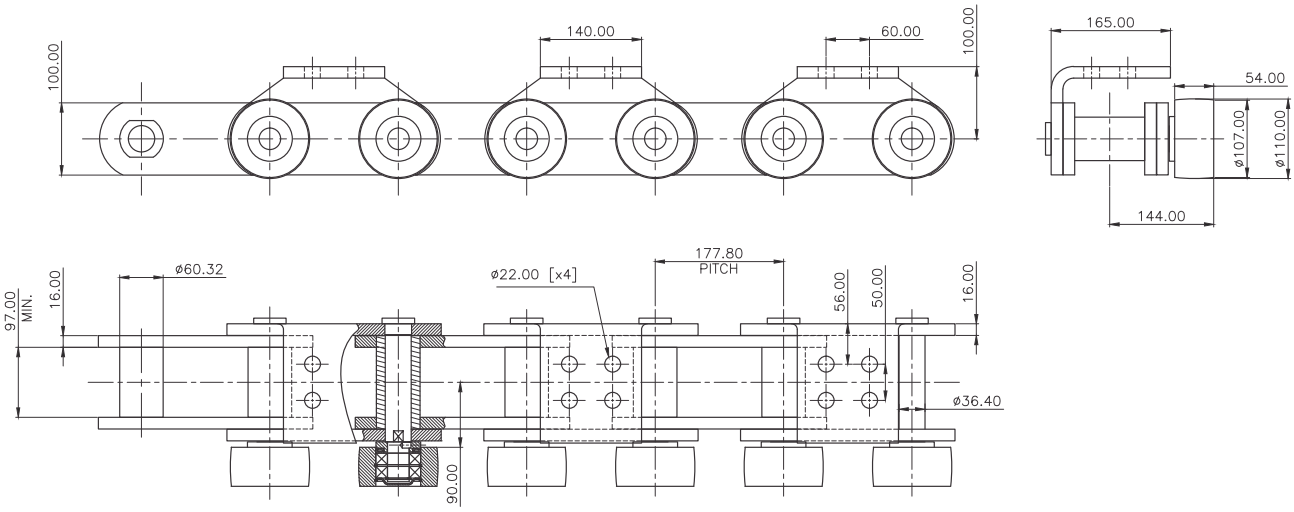

TIDC MODEL: S 17780 01 SR OBR 1L

MINIMUM BREAKING LOAD= 90,000 KGF

High Performance and Hi-Load Elevators Maintenance Check List

Preventive Maintenance Check List

1. The buckets should be periodically checked for loose bolts and build up of material. All damaged buckets should either be repaired or replaced to eliminate material falling in to the boot.
2. Check the rubber lip on the inside of the discharge spout of elevator after approximately three months of operation. Replace if worn.
3. Traction wheels and sprockets. Check for unusual or excessive wear such as hooking of the sprocket teeth. Check and re-torque bolts on replacement segmental rims on both head and tail shafts.
4. Check take-up for bucket clearance with bottom of boot. Remove a two-link section when required.
5. For safety to personnel and equipment, keep areas around loading and discharge points, drive, controls, and safety devices clean and free from obstructions.
6. Inspect the chain quarterly / during scheduled shutdown.

- Inner faces of the bush hole sidebar should be checked for wear. This is an indication of misalignment.
- Loose or unseated pins are danger signals and could lead to a sudden and unexpected chain separation (shutdown).
- Excess material buildup in the chain and attachments could cause improper seating on sprockets and rough elevator operation. Result - accelerated wear.
- Round parts in chain; that is, the pins and bushings should be inspected for wear. Refer to "Chain Component Wear Chart".
- Sprockets should be inspected for alignment and excessive tooth wear. Worn sprocket teeth (hooking) will cause chain to hang-up and/or back flex, resulting in damage to the chain and buckets.

100 Hour (Preliminary) Inspection

Inspect chain for signs of premature wear. Pay particular attention to signs of "scrubbing" on inner sidebars. This is a sign of machinery misalignment which must be corrected before further operation.

2000 Hour (Minor) Inspection

1. Chain inspection.

   Check inside block links for unequal wear from traction wheel (or sprocket). Check all sidebars and bushing ODs for uneven or deep wear Patterns. Visually inspect clearance between each set of inner and outer sidebars. Excessive clearance suggests pin fracture,inspect pin and replace if fractured. If more than five fractured pins are found,replace the entire chain at earliest convenience.

2. Traction wheels and sprockets

   Check for unusual or excessive wear such as hooking of sprocket teeth or crowning of wheels. Check torque values for segmental rim bolts.

3. Buckets

   Check for loose or missing bucket bolts (retorque/replace as required). Check for unusual wear patterns of damaged buckets.

4. Inspect and adjust rubber peeler lip on the inside of the discharge Spout. Replace if excessively worn.

5. Check stop blocks; check for free operation of take-up guides; Check for evidence of wear on guides.

8000 Hour (Major) Inspection

1. Chain Inspection
   Check all sidebars and bushing ODs for uneven or deep wear patterns. Check inside block links for unequal wear from traction wheel (or sprocket). Check for chain elongation wear.

   Step 1. : Accurately measure the length of chain and if the chain has elongated more than shown in "Chain Elongation Limit Chart" below, proceed to step 2.

   Step 2 : Remove about 5 pins at random and measure the pin O.D. and bushing I.D. Compare these measurements with the dimensions listed in the "Chain Component Wear Chart" below. Wear rate drastically accelerates when the pin or bushing passes this limit.

   Note: Sound judgment must be exercised when projecting additional chain life based on current wear measurement (rate). More frequent inspections may be required if wear is approaching the limits listed in the "Chain Elongation Limit Chart".

Caution : Bushing O.D. should be inspected for signs of rapid wear due to sprocket scrubbing or traction wheel slippage. If wear exceeds 3.81mm,exposure of the pin may be imminent and all bushings should be checked to see if any have worn through. If war exceeds 3.81 mm, the bushing outer hard case has been worn through,replace the chain at earliest convenience. If any pins are exposed,the chain should be replaced immediately.

Sidebars : Visually inspect all sidebars at pin and bushing holes for fatigue cracks; replace all sidebars with fatigue cracks. If more than two cracked sidebars are found replace the entire chain at earliest convenience.

1. Attachments
   Visually inspect the bend line of all attachments. Replace any pitches with cracks.

2. Segmental traction wheels and sprockets.
   Check for loose or missing segmental rim bolts. Check torque values. If bolts are missing, replace with proper diameter high strength type. Check for evidence of axial movement along shaft; check setscrew or retorque fasteners onshaft/hub locking device per service manual.

   Check for evidence of unusual or excessive wear and replace sets of segments as required. If the 1/8 " wear indicator has worn away - replace segments.

3. Bearings
   Check head shaft bearings for evidence of wear and re-grease per service manual.
   Check tail shaft bearing and sleeves for evidence of wear. If the inner 3/8" thick ring has wornthrough the top side - replace.

4. Gravity Take-up
   Check stop blocks; check for free operation of take-up guides; check for evidence of wear on guides. If guides have worn and cannot be adjusted to maintain 1/8" clearance - replace.

5. Buckets
   Check for loose or missing bucket bolts (retorque/replace as required). Check for unusual wear patterns or damaged buckets.

CORRECT ALL DEFICIENCIES BEFORE CONTINUING OPERATION

20000 Hour (Special) Inspection

1. Chain Inspection

   Remove approximately 3.048M of chain and buckets. Disassemble buckets from chain.

   Completely check chain components for fatigue cracks by non-destructive methods such as magna flux,dye check,or sonic testing. If any fatigue failures are detected in this sample, the entire chain should be replaced at the earliest convenience.

2. If no evidence of fatigue, check the 3.048M sample for elongation wear per step 1 of the 8000 Hour (Major) Inspection. Segmental traction wheels and sprockets: See item 2 of 8000Hour (Major) Inspection.

3. Bearings: See item 3 of 8000 Hour (Major) Inspection.

4. Gravity Take-up: See item 4 of 8000 Hour (Major) Inspection.

5. Buckets: See item 5 of 8000 Hour (Major) Inspection.

Inspection Sequence

Important Note: If at any time a chain pin or sidebar breaks and the chain falls during operation, follow 8000 Hour (Major) Inspection Procedure, plus complete Non Destructive Test of 3.048 Meter of chain as explained in 20000 Hour (Special) Inspection.

Hours of Service	Type of Inspection	Hours of Service	Type of Inspection
100	Preliminary	20000	Special
500	Preliminary	22000	Minor
2000	Minor	24000	Major
4000	Minor	26000	Minor
6000	Minor	28000	Minor
8000	Major	30000	Minor
10000	Minor	32000	Major
12000	Minor	34000	Minor
14000	Minor	36000	Minor
16000	Major	38000	Minor
18000	Minor	40000	Major

Chain Component Wear Chart

Chain Number	Pin Outside Diameter (MM)		Bush Inside Diameter (MM)	
	Unworn	Max. Wear	Unworn	Max. Wear
SP X856	25.40	21.97	26.04	28.22
SP 0956	25.40	21.97	26.04	28.22
SP 4857	25.40	21.97	26.04	28.22
SP 0958	28.60	25.02	29.16	31.39
SP 4864	31.75	27.81	32.26	35.56
SP 0984	34.92	30.86	35.48	38.74
S 22860 19 BE G5 1A	25.40	21.97	26.04	27.15
S 22860 21 BE G6 1A	38.10	33.4	38.86	40.44
S 22860 33 BE G5 1A	31.75	27.81	32.39	33.96

Chain Component Wear Chart

Chain Number	No of Pitches Required for Measurement	Chain Length (MM)	
		Unworn	Max. Wear
SP X856	20	3048.00	3124.20
SP 0956	20	3048.00	3124.20
SP 4857	20	3048.00	3124.20
SP 0958	20	3048.00	3124.20
SP 4864	18	3200.40	3270.20
SP 0984	18	3200.40	3270.20
S 22860 19 BE G5 1A	14	3200.40	3248.70
S 22860 21 BE G6 1A	14	3200.40	3248.70
S 22860 33 BE G5 1A	14	3200.40	3248.70

Lubrication Chart

Item	Lubrication	Frequency	Method	Remarks
Drive Chain	SAE 15W40 Oil	4 to 10 drops of Oil per minute	Continous Online Drip Feed Lubrication	Oil to be applied between the Link Plates of each Chain Strand
Bucket Chain	None	Never		Lubricant when combined with the materials being handled is rendered ineffective due to lack of flowability in to chain joint
Anti-Friction Bearings	NLGI #3, Lithium Complex Grease	See Manufacturer's Service Manual	Lubrication Fitting	Purge Seals when adding Grease
Motor	See Manufacturer's Service Manual			Motor is Oiled before leaving factory
Reducer	See Manufacturer's Service Manual			Reducer is shipped without oil - Fill to proper level with correct Oil before placing in operation

STANDARD ROLLER CHAINS

EUROPEAN SERIES

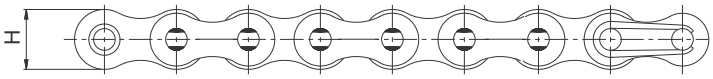

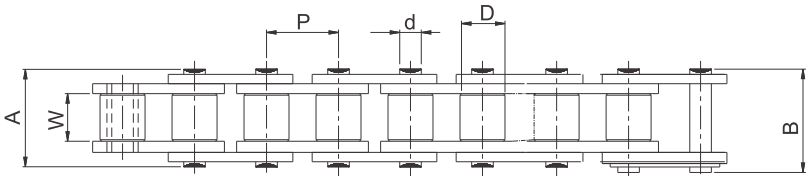

ISO 606/BS 228/DIN 8187

The European series of roller chains are designed for use in mechanical power transmission systems.

SINGLE STRAND

Intl. Ref No.	ROMBO Chain No.	Pitch (P)	Width between Inner Plates (W) (Min)	Rollar Dia (D) (Max)	Bearing Pin Dia (D) (Max)	Plate Height (H) (Max)	Width over Bearing Pin (A) (Max)	Width over Joint Fasteners (B) Max	Projected bearing Area Sq.cm	Avg. Weight Per Meter (Kg)	Tensile Strength (KN) (Min)	Tensile Strength (KN) (Avg)	Spares Availability
04B -1	D04B 01	6.00	2.80	4.00	1.85	5.00	7.40	10.30	0.08	0.12	3.00	3.33	A,B,C,D
05B -1	D05B 01	8.00	3.00	5.00	2.31	7.10	8.60	11.70	0.11	0.18	5.00	5.90	A,B,C,D
06B -1*	D061 01	9.525	5.72	6.35	3.28	8.20	13.50	16.80	0.28	0.40	9.00	10.70	A,B,C,D
08B -1	D083 01	12.70	7.75	8.51	4.45	11.80	17.00	20.90	0.50	0.68	18.00	21.10	A,B,C,D
10B -1	D101 01	15.875	9.65	10.16	5.08	14.70	19.60	23.70	0.67	0.91	22.40	27.45	A,B,C,D
12B -1	D102 01	19.05	11.68	12.07	5.72	16.10	22.70	27.30	0.88	1.12	29.00	32.35	A,B,C,D
16B -1	D160 01	25.40	17.02	15.88	8.27	21.00	36.10	41.50	2.07	2.59	60.00	70.60	A,B,C,D
20B -1	D200 01	31.75	19.56	19.05	10.19	26.40	43.20	49.30	2.91	3.60	95.00	109.85	A,B,C,D
24B -1	D240 01	38.10	25.40	25.40	14.63	33.40	53.40	60.00	5.49	6.85	160.00	179.00	B,C,D
28B -1	D280 01	44.45	30.99	27.94	15.90	37.00	65.10	72.50	7.26	8.56	200.00	226.00	B,C,D
32B -1	D320 01	50.80	30.99	29.21	17.81	42.20	67.40	75.30	8.05	9.49	250.00	272.80	B,C,D
40B -1	D400 01	63.50	38.10	39.37	22.89	52.90	82.60	92.60	12.61	15.53	355.00	390.50	B,C,D
48B -1	D480 01	76.20	45.72	48.26	29.24	63.80	99.10	109.10	20.40	24.45	560.00	602.00	B,C,D

* Straight Side Plates

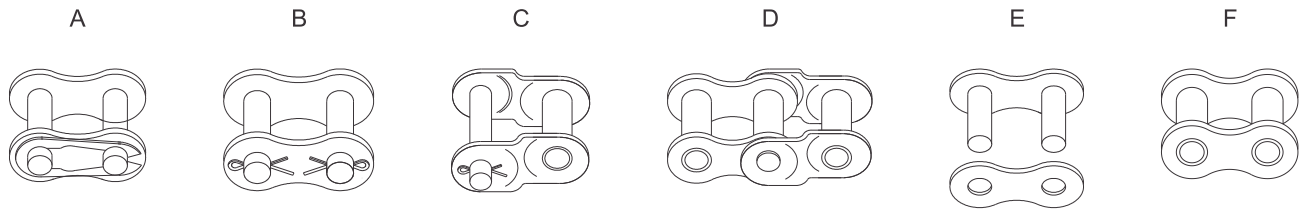

Note : Spares E & F are available for all models

STANDARD ROLLER CHAINS

EUROPEAN SERIES

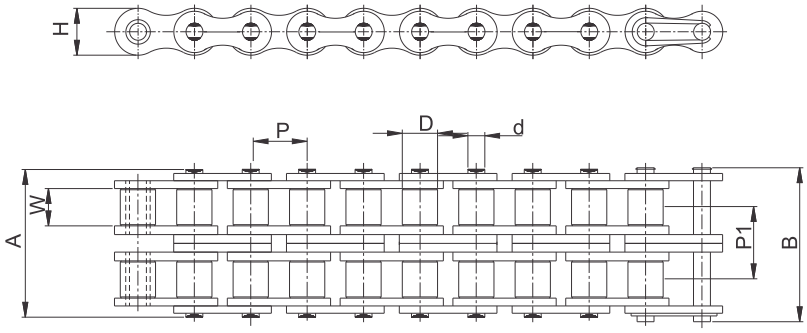

ISO 606/BS 228/DIN 8187

DOUBLE STRAND

Intl. Ref. No.	ROMBO Chain No.	Pitch (P)	Width between Inner Plates (W) (Min)	Roller Dia (D) (Max)	Bearing Pin Dia (d) (Max)	Plate Height (H) (Max)	Width Over Bearing Pin (A) (Max)	Width Over Joint Fasteners (B) (Max)	Transv-erse Pitch (P1)	Projected Bearing Area Sq.cm	Avg. Weight Per Metre (Kg)	Tensile Strength (KN) (Min)	Tensile Strength (KN) (Avg.)	Spares Availa-bility
05B-2	D05B 02	8.00	3.00	5.00	2.31	7.10	14.30	17.40	5.64	0.22	0.32	7.80	8.55	A,B,C,D
06B-2*	D061 02	9.525	5.72	6.35	3.28	8.20	23.80	27.10	10.24	0.56	0.76	16.90	19.25	A,B,C,D
08B-2	D083 02	12.70	7.75	8.51	4.45	11.80	31.00	34.90	13.92	1.00	1.31	32.00	38.05	A,B,C,D
10B-2	D101 02	15.875	9.65	10.16	5.08	14.70	36.20	40.30	16.59	1.34	1.79	44.50	57.30	A,B,C,D
12B-2	D120 02	19.05	11.68	12.07	5.72	16.10	42.20	46.80	19.46	1.76	2.22	57.80	65.70	A,B,C,D
16B-2	D160 02	25.40	17.02	15.88	8.27	21.00	68.00	73.40	31.88	4.14	5.03	106.00	137.55	A,B,C,D
20B-2	D200 02	31.75	19.56	19.05	10.19	26.40	79.00	85.10	36.45	5.82	7.33	170.00	210.00	A,B,C,D
24B-2	D240 02	38.10	25.40	25.40	14.63	33.40	101.00	107.60	48.36	10.98	13.50	280.00	322.50	B,C,D
28B-2	D280 02	44.45	30.99	27.94	15.90	37.00	124.00	131.40	59.56	14.52	16.96	360.00	412.60	B,C,D
32B-2	D320 02	50.80	30.99	29.21	17.81	42.20	126.00	133.90	58.55	16.10	18.74	450.00	510.80	B,C,D
40B-2	D400 02	63.50	38.10	39.37	22.89	52.90	154.00	164.00	72.29	25.23	30.72	630.00	708.10	B,C,D
48B-2	D480 02	76.20	45.72	48.26	29.24	63.80	190.00	200.00	91.21	40.81	48.54	1000.00	1100.00	B,C,D

* Straight Side Plates

Note : Spares E & F are available for all models

ISO 606/BS 228/DIN 8187

STANDARD ROLLER CHAINS

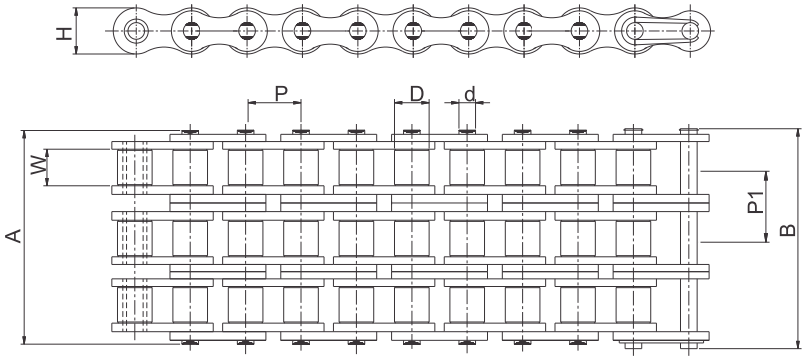

TRIPLE STRAND

Intl. Ref No.	ROMBO Chain No.	Pitch (P)	Width between Inner Plates (W) (Min)	Rollar Dia (D) (Max)	Bearing Pin Dia (D) (Max)	Plate Height (H) (Max)	Width over Bearing Pin (A) (Max)	Width over Joint Fasteners (B) Max	Trans verse Pitch (P1)	Projected bearing Area Sq.cm	Avg. Weight Per Meter (Kg)	Tensile Strength (KN) (Min)	Tensile Strength (KN) (Avg)	Spares Availability
05B-3	D05B 03	8.00	3.00	5.00	2.31	7.10	19.90	23.00	5.64	0.33	0.50	11.10	12.20	A,B,C,D
06B -3*	D061 03	9.525	5.72	6.35	3.28	8.20	34.00	37.30	10.24	0.84	1.12	24.90	27.70	A,B,C,D
08B -3*	D083 03	12.70	7.75	8.51	4.45	11.80	44.90	48.80	13.92	1.50	1.94	47.50	56.00	A,B,C,D
10B-3	D101 03	15.875	9.65	10.16	5.08	14.70	52.80	56.90	16.59	2.01	2.68	66.70	83.35	A,B,C,D
12B-3	D120 03	19.05	11.68	12.07	5.72	16.10	61.70	66.30	19.46	2.64	3.32	86.70	101.55	A,B,C,D
16B-3	D160 03	25.40	17.02	15.88	8.27	21.00	99.90	105.30	31.88	6.21	7.65	160.00	202.80	A,B,C,D
20B-3	D200 03	31.75	19.56	19.05	10.19	26.40	116.00	122.10	36.45	8.73	10.96	250.00	306.55	A,B,C,D
24B-3	D240 03	38.10	25.40	25.40	14.63	33.40	150.00	156.60	48.36	16.47	20.20	425.00	490.60	B,C,D
28B-3	D280 03	44.45	30.99	27.94	15.90	37.00	184.00	191.40	59.56	21.78	25.38	530.00	625.95	B,C,D
32B-3	D320 03	50.80	30.99	29.21	17.81	42.20	184.00	191.90	58.55	24.15	28.04	670.00	775.00	B,C,D
40B-3	D400 03	63.50	38.10	39.37	22.89	52.90	227.00	237.00	72.29	37.85	45.97	950.00	1088.90	B,C,D
40B-3	D480 03	76.20	45.72	48.26	29.24	63.80	281.00	291.00	91.21	61.22	72.67	1500.00	1648.10	B,C,D

* Straight Side Plates

Note : Spares E & F are available for all models

CERTIFICATE TÜV NORD

Management system as per
ISO 14001 : 2004

In accordance with TÜA NORD CERT procedures, it is hereby certified that

TIDC INDIA
(UNIT OF TUBE INVESTMENT OF INDIA LIMITED)
Survey No. 264, 268/1, 268/2A, 268/2B, 269/1 & 2,
CTH Road, Ambattur, Chennai- 600 053,
Tamilnadu, India

INDIA murugappa

applies a management system in line with the above standard for the following scope

Manufacture of Automotive, Industrial, Agricultural & Cam Chains, Engineering Class Chain, Fine Blanking components & Accessories

Certificate Registration No. 44 104 114274 -E3 Valid until 17.07.2014
Audit Report No. 2.5-1490/1999

Certification Body
at TÜV NORD CERT GmbH Mumbai, 18.07.2011

This certification was conducted in accordance with the TÜA NORD CERT auditing and certification procedures and is subject to regular surveillance audits.
TÜV NORD CERT GmbH Langemarckstrasse 20 45141Essen www.tuev-nord-cert.com

IAF

TGA-ZM-07-06-00

CERTIFICATE TÜV NORD

Management system as per
BS OHSAS 18001 : 2007

In accordance with TÜA NORD CERT procedures, it is hereby certified that

TIDC INDIA
(UNIT OF TUBE INVESTMENT OF INDIA LIMITED)
Survey No. 264, 268/1, 268/2A, 268/2B, 269/1 & 2,
CTH Road, Ambattur, Chennai- 600 053, Tamilnadu,
India
with the location
TIDC INDIA, Andhra Pradesh, India
TIDC INDIA, Uttarakhand,India

murugappa INDIA

applies a management system in line with the above standard for the following scope

Manufacture of Automotive, Industrial, Agricultural & Cam Chains, Engineering Class Chain, Fine Blanking components & Accessories

Certificate Registration No. 44 116 111314 Valid until 2014.07.06
Audit Report No. 3508 2944

Certification Body
at TÜV NORD CERT GmbH Essen, 2011.07.07

This certification was conducted in accordance with the TÜA NORD CERT auditing and certification procedures and is subject to regular surveillance audits.

TÜV NORD CERT GmbH Langemarckstrasse 20 45141Essen www.tuev-nord-cert.com

TGA-ZM-ET-06-64

CERTIFICATE TÜV NORD

DIN EN ISO 9001 : 2008

TIDC INDIA

IAF

- All dimensions indicated are in mm.
- All information contained in this catalogue is subject to change after publication.
- While all reasonable care has been taken in compiling the information contained in this catalogue, no responsibility is accepted for printing errors.

Edition / 2013

INDIA

murugappa

TIDC INDIA

Unit of Tube Investments of India Ltd.

FACTORY / MARKETING HEAD OFFICE :
Post Bag No.11, Ambattur, Chennai - 600 053.
Tel. : 044 - 4223 5508 / 509 Fax : 044 - 4223 5556
Email : industrialchains@tii.murugappa.com
www.tidcindia.in

NORTH

TIDC INDIA
2nd Floor, Jeevan Deep Building,
10, Parliament Street,
New Delhi - 110 001.
Tel. : 011 - 4150 2244

SOUTH

TIDC INDIA
Post Bag No. 11, Ambattur,
Chennai - 600 053.
Tel. : 044 - 4223 5500

EAST

TIDC INDIA
Chabbildas Towers, 2nd Floor,
6A, MiddleTon Street,
Kolkatta - 700 071.
Tel. : 033 - 2281 0289

WEST

TIDC INDIA
302-A, M.P.J. Chambers,
Wakadewadi, Opp. to Centuri TVS,
Pune - 411 003.
Tel. : 020 - 2581 3170